Two-Drawer Bookcase • Sliding Half-Dovetail Joinery • Holiday Lantern • Folding Desk Clock

Woodsmith®

Vol. 20 / No. 120

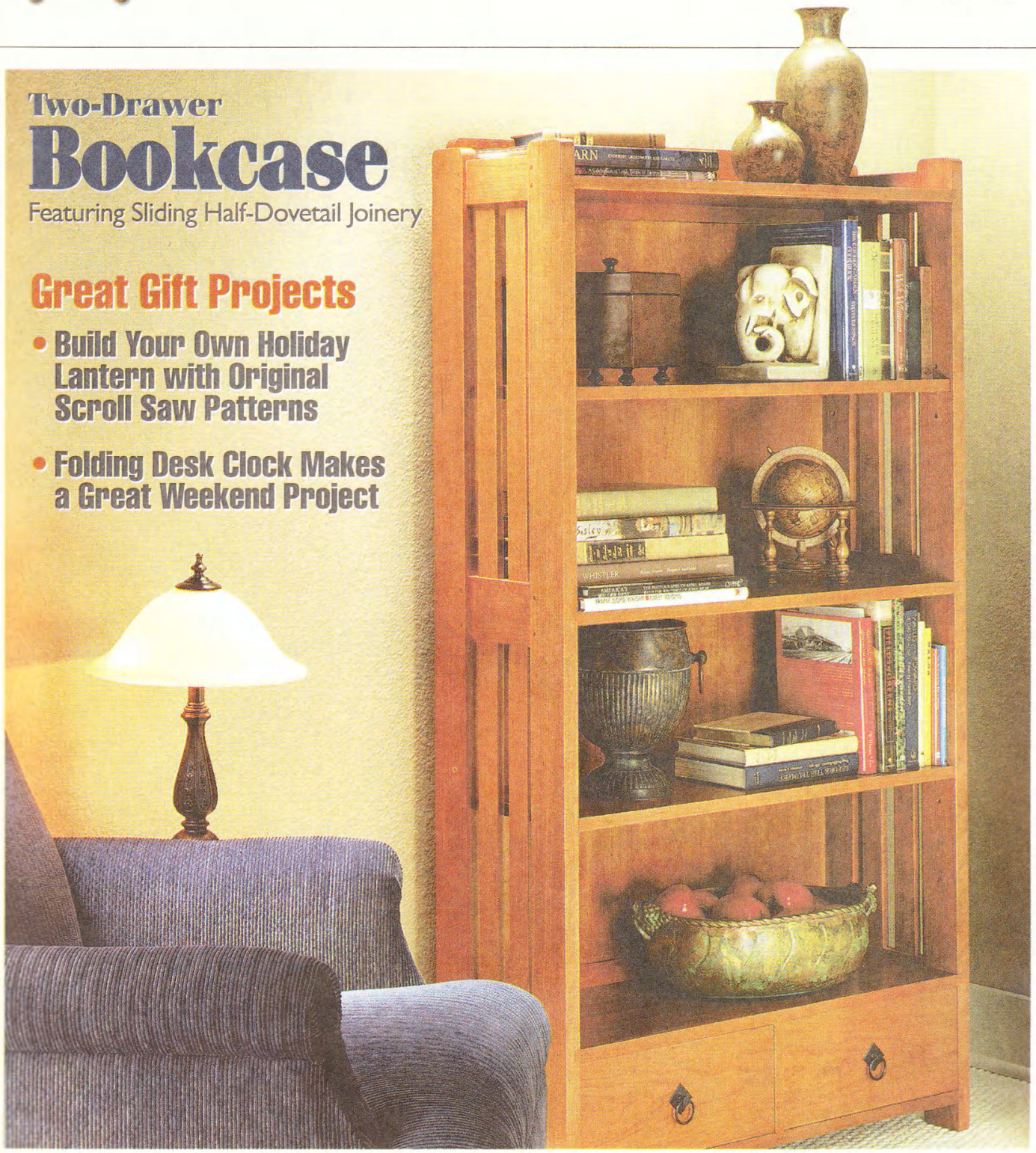

Two-Drawer Bookcase

Featuring Sliding Half-Dovetail Joinery

Great Gift Projects

- Build Your Own Holiday Lantern with Original Scroll Saw Patterns
- Folding Desk Clock Makes a Great Weekend Project

Woodsmith

No. 120 December, 1998

Publisher Donald B. Peschke
Editor Terry J. Strohman
Associate Editors Jon Garbison, Vincent Ancona
Art Director Todd Lambirth
Senior Illustrators David Kreyling, Dirk Ver Steeg, Mike Mittermeier

CREATIVE RESOURCES

Creative Director: Ted Kralicek • *Project Developer:* Ken Munkel • *Sr. Project Designers:* Kent Welsh, Kevin C. Boyle • *Shop Manager:* Steve Curtis • *Shop Craftsman:* Steve Johnson • *Senior Photographer:* Crayola England

BOOKS

Executive Editor: Douglas L. Hicks • *Art Director:* Steve Lueder • *Senior Graphic Designer:* Chris Glowacki • *Graphic Intern:* Vu Nguyen • *Editorial Intern:* Joseph E. Irwin

CIRCULATION

Subscriber Services Director: Sandy Baum • *New Business Director:* Glenda K. Battles • *New Business Manager:* Todd Bierle • *Promotion Manager:* Rick Junkins • *Renewal Manager:* Paige Rogers • *Billing Mgr.:* Rebecca Cunningham • *Assistant Subscription Mgr.:* Joy Krause • *Associate Graphic Design Director:* Susie Rider • *Sr. Graphic Designer:* Cheryl L. Simpson

CORPORATE SERVICES

Vice President of Planning and Finance: Jon Macarthy • *Controller:* Robin Hutchinson • *Sr. Account.:* Laura Thomas • *Accts. Payable:* Mary J. Schultz • *Accts. Receivable:* Margo Petrus • *Production Dir.:* George Chmielarz • *Production Assistant:* Susan Rueve • *Electronic Pub:* Douglas M. Lidster • *Pre-press Image Specs.:* Troy A. Clark, Minniette Bieghler • *New Media Manager:* Gordon C. Gaippe • *Web Site Art Director:* Gene Pedersen • *H.R. Assistant:* Kirsten Koele • *Admin. Assistant:* Julia Fish • *Receptionists:* Jeanne Johnson, Sheryl Ribbey • *Special Projects Director:* Saville H. Inman • *Building Maint.:* Ken Griffith

WOODSMITH MAIL ORDER

Operations Director: Bob Baker • *Materials Mgr:* Mark Mattiussi • *Customer Service Mgr.:* Jennie Enos • *Warehouse Supr.:* Nancy Johnson • *Buyer:* Linda Jones • *Technical Service Rep.:* Matt TeRonde • *Cust. Serv. Reps.:* Anna Cox, Tammy Truckenbrod, Nancy Downey, Adam Best, Deborah Rich • *Warehouse:* Sylvia Carey • *Quality Control Tech.:* Frank Johnson

WOODSMITH STORE

Manager: Dave Larson • *Assistant Manager:* Paul Schneider • *Sales Staff:* Pat Lowry, Jerome Herr, Wendell Stone, Jim Barnett, Kathy Smith, John Johnson • *Office Manager:* Vicki Edwards

Woodsmith® (ISSN 0164-4114) is published bimonthly (Feb., Apr., June, Aug., Oct., Dec.) by August Home Publishing Company, 2200 Grand, Des Moines, IA 50312.

Woodsmith® is a registered trademark of August Home Publishing.
Copyright© 1998 August Home Publishing Company. All rights reserved.

Subscriptions: Single copy: $4.99. One year subscription (6 issues), $21.94. (Canada/Foreign add $6 per year, U.S. funds.)
Periodicals Postage Paid at Des Moines, IA and at additional offices. USPS/Heartland Press Automatable Poly.
Postmaster: Send change of address to *Woodsmith*, Box 37112, Boone, IA 50037-2112.
Subscription Questions? Write to *Woodsmith*, P.O. Box 842, Des Moines IA 50304-9961 or call 1-800-333-5075, 8:00 am to 5:00 pm, Central Time, weekdays. Or fill out the Subscription Services form on our web site: http://www.woodsmith.com
E-Mail: woodsmith@woodsmith.com
World Wide Web: http://www.woodsmith.com

Printed in U.S.A.

EDITOR'S COLUMN

SAWDUST

With the Holidays just around the corner, there are two gift projects at the top of my "to do" list — a Holiday Lantern and a Folding Desk Clock.

HOLIDAY LANTERN. The Holiday Lantern featured on page 18 of this issue takes a different approach to one of my favorite seasonal traditions — putting up lights. This project features scroll-sawn panels with different holiday scenes. When you turn on the light, it gives a warm, festive glow to any room.

FOLDING DESK CLOCK. The second gift project I've been working on is a Folding Desk Clock, which begins on page 28. With figured veneer and solid brass hardware, it's sure to please anyone who receives it. But best of all, this timeless project doesn't require much time to build. In fact, the entire project can be completed over a weekend.

TWO-DRAWER BOOKCASE. The feature project in this issue — the Two-Drawer Bookcase, isn't about to be built over a single weekend. Besides being filled with books, it's also filled with a couple of challenging woodworking techniques — pegged mortise and tenons and sliding half dovetails.

HELP WANTED. We're looking for an associate editor to join our staff here at August Home Publishing. The ideal candidate will have both writing and woodworking experience.

If you'd like to apply, please send a resume and letter highlighting your experience to Doug Hicks, 2200 Grand Ave., Des Moines, IA 50312.

Terry

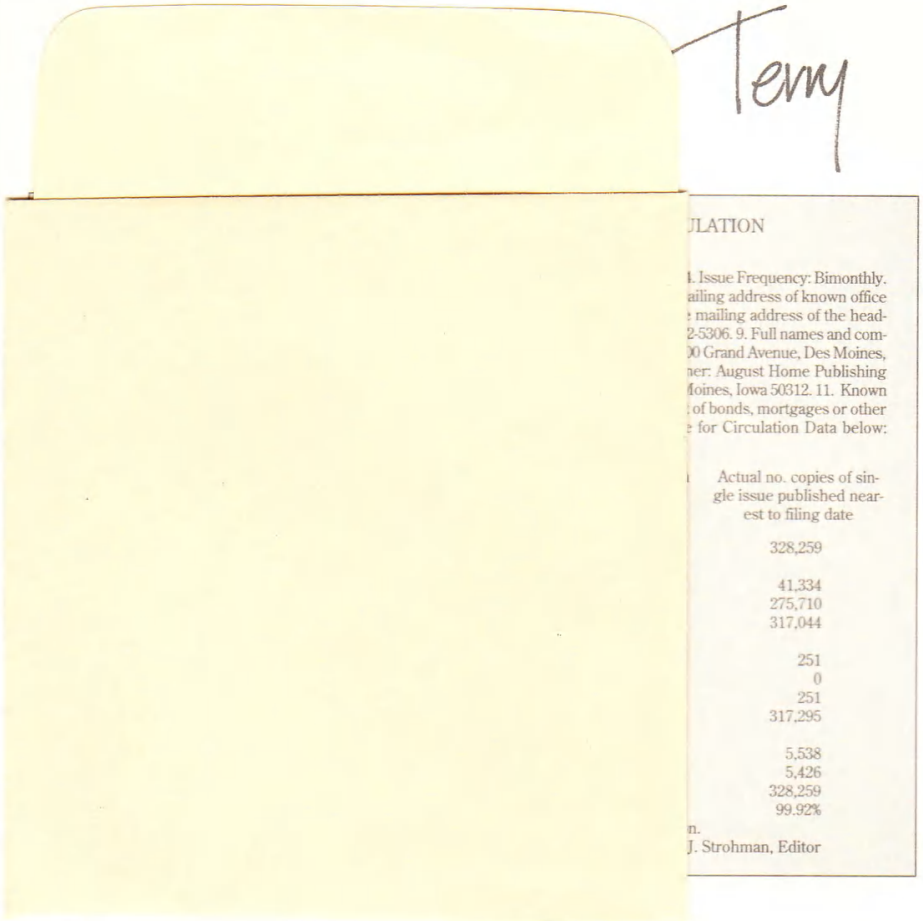
ULATION

. Issue Frequency: Bimonthly.
ailing address of known office
mailing address of the head-
2-5306. 9. Full names and com-
00 Grand Avenue, Des Moines,
ner: August Home Publishing
Moines, Iowa 50312. 11. Known
of bonds, mortgages or other
for Circulation Data below:

Actual no. copies of single issue published nearest to filing date

328,259

41,334
275,710
317,044

251
0
251
317,295

5,538
5,426
328,259
99.92%

n.
J. Strohman, Editor

A LOOK INSIDE

CONTENTS

Features

Two-Drawer Bookcase 6

This bookcase features five shelves, offering plenty of room for books or display items. And as an added bonus, there's a pair of drawers at the bottom that provides extra storage space.

Sliding Half Dovetails 14

The neat thing about sliding half dovetails is that they're held together entirely by mechanical strength — no glue. And to make them, all you need is a router and a simple jig.

Holiday Lantern 18

Looking for a good way to light up the holidays? This scroll saw project may be just the ticket. But don't be surprised if nearly everyone who sees it asks you to make them one.

Ripping Tips 24

Although it's one of the most basic woodworking skills, there's more to ripping than meets the eye. Here are some pointers to help you get great results with every cut.

Folding Desk Clock 28

On a desk or on the go, this folding desk clock looks great and doesn't take up much space. It includes a press-in quartz clock movement and room for your favorite photograph.

Veneering Small Projects 32

Any way you slice it, adding veneer is a quick way to transform the look of a project. If you've never tried veneering before, here are a few tips to get you started on a small-scale project.

Departments

Tips & Techniques 4
Shop Notes 16
Talking Shop 34
Sources 35

Two-Drawer Bookcase *page 6*

Holiday Lantern *page 18*

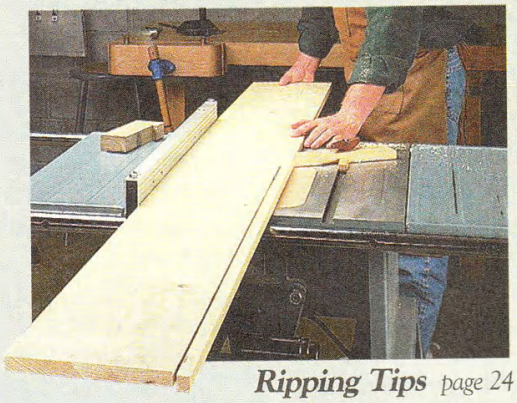

Ripping Tips *page 24*

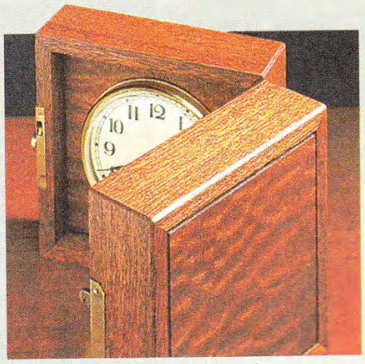

Folding Desk Clock *page 28*

TIPS & TECHNIQUES

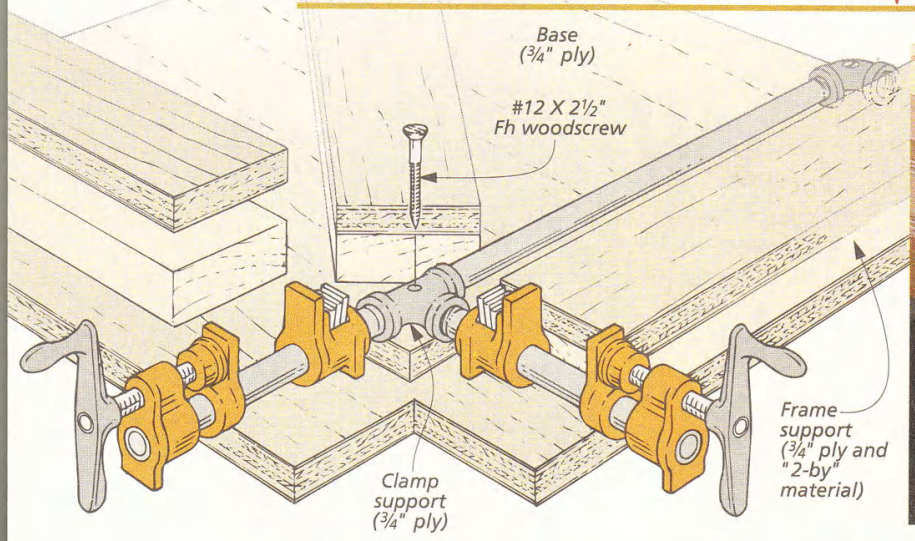

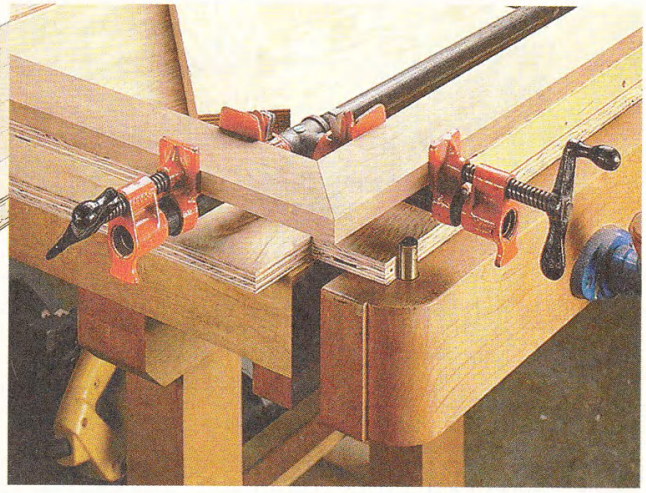

Corner Clamp

Whenever I'm assembling mitered frames, I have a difficult time holding the frame pieces together long enough to install the fasteners. But instead of buying an expensive corner clamp, I decided to make my own using a couple of pipe clamps, see photo.

I simply attached the clamps to a couple of black pipe nipples that thread into a "T" fitting. Then the whole assembly is fastened to a plywood base.

The base is just a piece of ¾"-thick plywood, see drawing. (A notch cut in one corner of the plywood provides clearance for assembling the frame pieces.) A couple of large screws fasten the clamp assembly to the base.

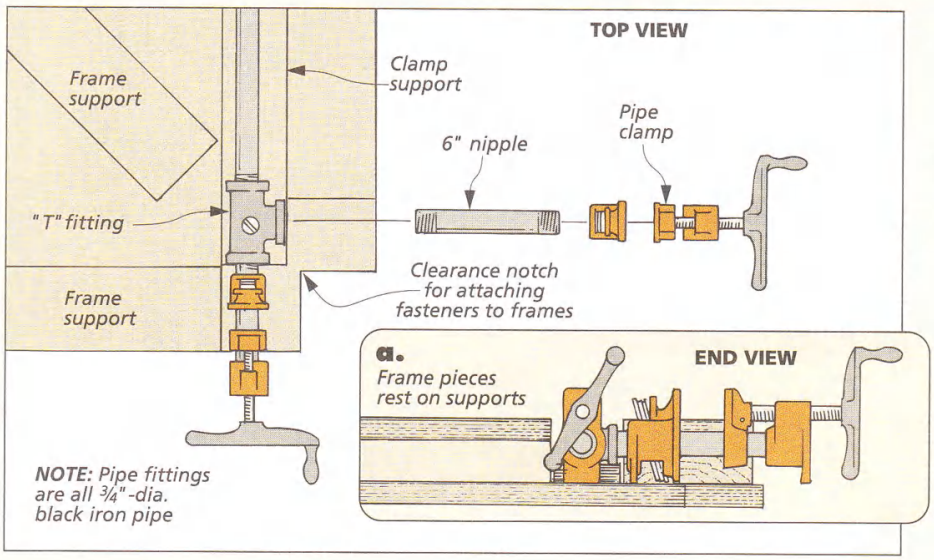

To support the frame pieces while they're in the clamps, I added frame supports along the edges and down the middle of the base, see drawing.

Charles Dibert
Elmore, Ohio

TIP UPDATE

In the last issue, we featured a tip on extending your table saw switch with black pipe fittings. Since then, several of you have pointed out that these are not safe for electrical use. Therefore, we recommend you consult an electrician before making this modification.

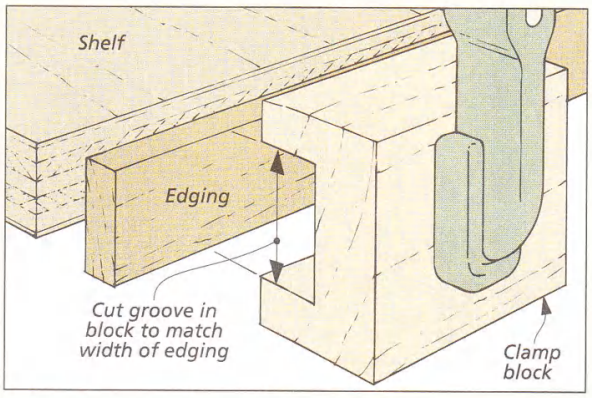

Applying Edging

Gluing hardwood edging to plywood has never been one of my favorite tasks. It's always tricky to keep the edging from slipping while tightening down the clamps. So to help hold the edging in place, I made some clamping blocks.

These blocks have a shallow, wide groove on one side to fit over the edging and plywood, see drawing. This holds the edging flush with the plywood.

To prevent the blocks from getting glued to the workpiece, I wax the surface of the blocks before using them.

Don Lyman
Harrisburg, Pennsylvania

Precision Hole Drilling Jig

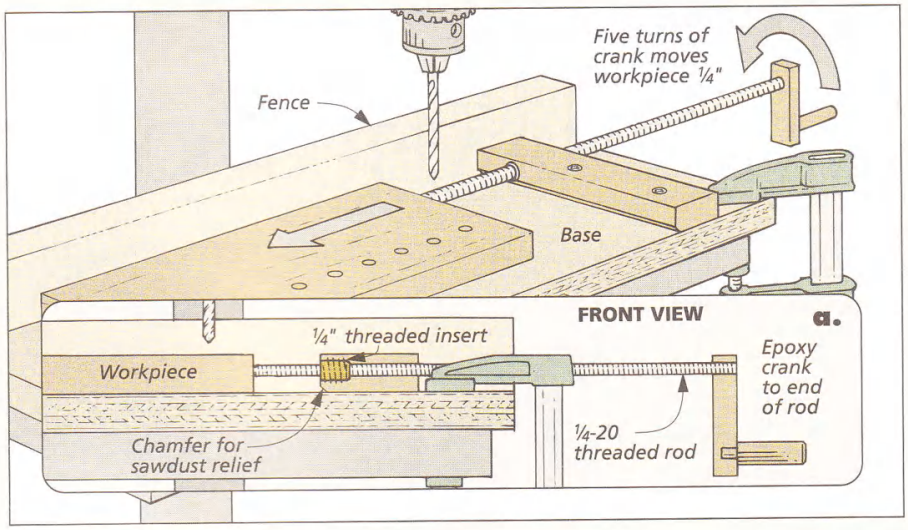

I've tried several different jigs in the past for spacing holes on a drill press. But recently I was drilling several rows of small holes for a cribbage board and I needed something more accurate. So I made a jig with a micro-adjust feature that allows for precise adjustment.

The jig starts off as a piece of ¾"-thick plywood. To this, I added a fence made from ¾"-thick hardwood. (The fence ensures that all the holes are equidistant from the edge of the workpiece.)

The micro-adjust mechanism is simply a block of wood with a hole drilled near one end and a ¼-20 threaded insert installed, see detail. The block is screwed to the end of the base. Then a piece of ¼" threaded rod is inserted through the threaded insert. Finally, I made a small crank and epoxied it to the end of the rod.

To use the jig, simply clamp it to the table of your drill press. Then after drilling the first hole, use the crank to shift the workpiece in position for the next hole. Every five turns of the crank advances the workpiece exactly ¼".

Edgar Schumann
Poughkeepsie, New York

Squaring Tip

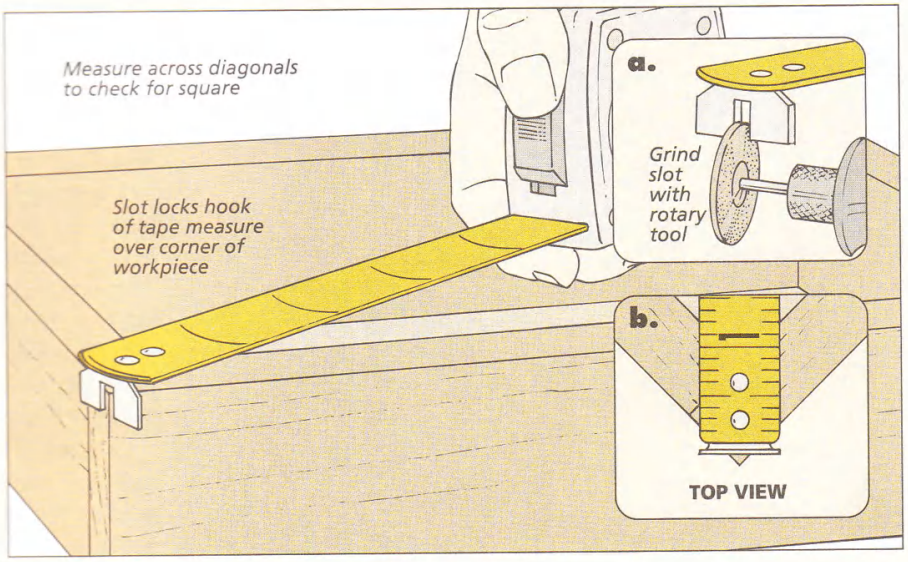

Whenever I'm assembling a box or carcase, I check for square by measuring across the diagonals. But trying to keep the hook of the tape from slipping off the corner of the project can be tricky.

To make things easier, I cut a small slot on the hook with a rotary tool, see drawing. The slot fits over the corner of the project, holding the tape in place.

Bob Kelland
St. John's, Newfoundland

SUBMIT YOUR TIPS

If you would like to share an *original* shop-tested tip, send it to: *Woodsmith*, Tips and Techniques, 2200 Grand Avenue, Des Moines, Iowa 50312. Or if it's easier, FAX it to us at: 515-282-6741. Or use our E-Mail address: woodsmith@woodsmith.com.

Include a brief explanation and sketch or photo. If your tip is published, you'll receive $30 to $150, depending on the published length. And don't worry, we'll rewrite the tip and redraw the art, if necessary. Also, *please* include a daytime phone number so we can contact you if we have any questions regarding your tip.

Shaker Stoppers

I've tried using cork stoppers on the bottom of salt and pepper shakers, but they have a nasty habit of falling out. So I came up with a better solution.

I simply cut out the screw-on cap from the side of a lemonade carton. By creating a large recess on the bottom of the shaker, the screw cap can be glued to the bottom.

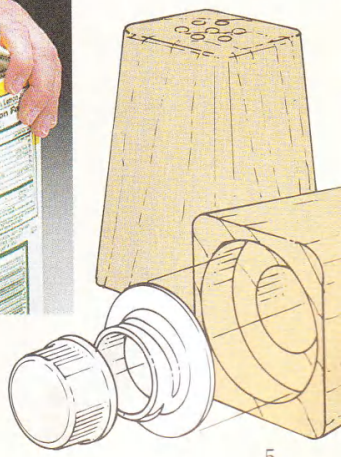

Clifford Hicks
Brevard, N. Carolina

FEATURE PROJECT

TWO-DRAWER BOOKCASE

This Craftsman-style bookcase seems pretty straightforward, but the shelves hold an interesting woodworking challenge: sliding half dovetails.

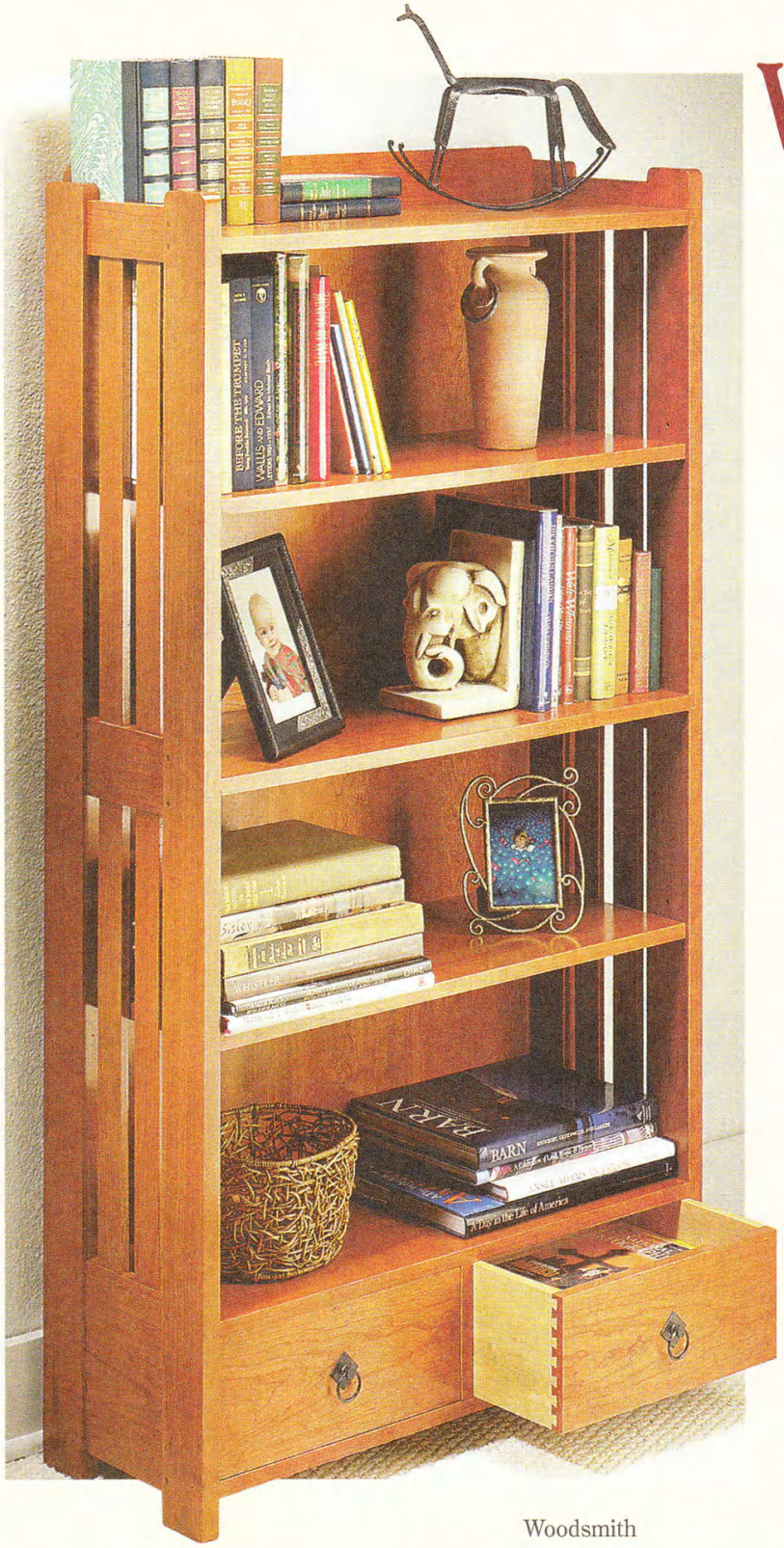

When I got my first look at the shop drawings for this project, I liked the design. And I took it to be a relatively simple, medium-size bookcase with a couple drawers at the bottom. But when figuring out exactly how to build it, I realized that this simple-looking project included some pretty interesting woodworking techniques.

SOLID WOOD SHELVES. Take the shelves, for instance. These solid wood panels are over 11" wide, so they need to be able to expand and contract freely. This means you can't simply cut a dado in the sides and then glue the shelves in place. The wood movement will eventually cause the joint to fail. And screwing into the end grain on the shelves isn't a very strong solution either.

SLIDING HALF DOVETAILS. Instead, this bookcase uses the mechanical strength of dovetails to hold the shelves between the sides. The ends of the four fixed shelves have a half dovetail profile that slides into half dovetail grooves on the inside of the side assemblies. (We've included a separate article on creating this dovetail joint, see page 14.)

Of course, the sliding half dovetail was only half the solution. They allowed the shelves to expand and contract freely, but you also don't want this wood movement to create any visible gaps or shoulders.

BACK RAILS. So to prevent this, the fixed shelves are tacked with a finish nail in front (to keep them flush). Then the back edge of each shelf fits into a groove on the back rail — with enough extra room inside the groove to allow for the wood movement. (Actually, the rails in back are added after the shelves are in place to make the assembly easier.)

These back rails (and plywood backs) do more than just hide the grooves, though. Like the half dovetails, they also strengthen the bookcase and help it to resist racking.

What you end up with is a strong, simple-looking bookcase. And a project that will challenge your woodworking skills.

Construction Details

OVERALL DIMENSIONS: 60"H x 32"W x 12"D

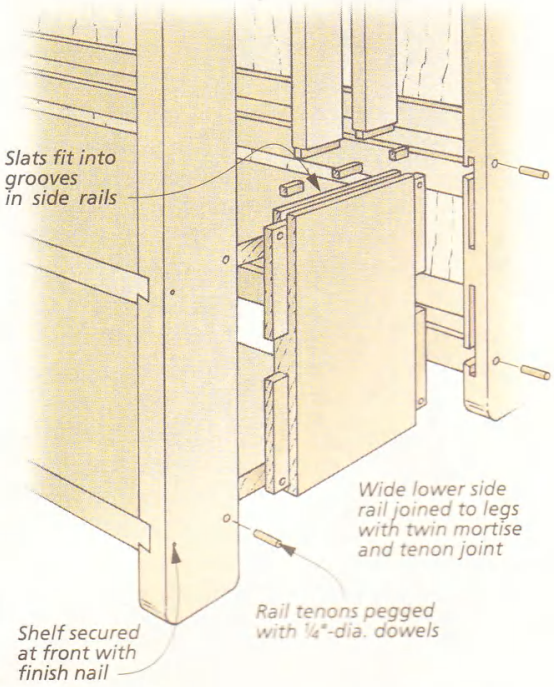

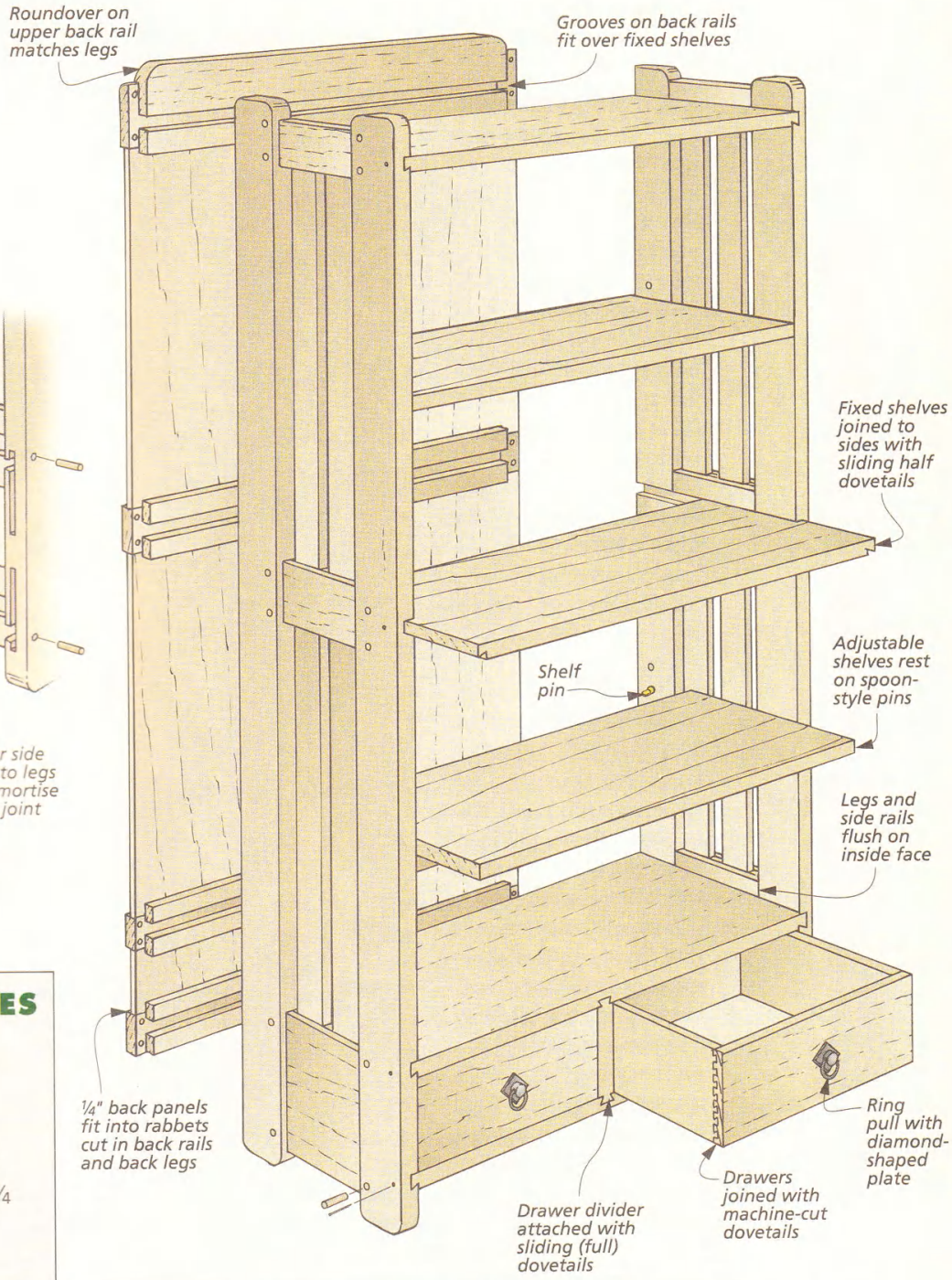

MATERIALS & SUPPLIES

A	Legs (4)	1 x 3 - 59¼
B	Upr. Side Rails (2)	¾ x 2½ - 7½
C	Mid. Side Rails (2)	¾ x 3½ - 7½
D	Lwr. Side Rails (2)	¾ x 8¾ - 7½
E	Slats (8)	½ x 1¾ - 21⅝
F	Fixed Shelves (4)	¾ x 11⅜ - 30¾
G	Adj. Shelves (2)	¾ x 11¼ - 30
H	Drawer Dividers (2)	¾ x 3 - 7
I	Drawer Guide (1)	¾ x 3½ - 6⅝
J	Upr. Back Rail (1)	¾ x 4½ - 31½
K	Lwr. Back Rails (3)	¾ x 3½ - 31½
L	Upr. Back Panel (1)	¼ ply. - 31½ x 21
M	Mid. Back Panel (1)	¼ ply. - 31½ x 20¾
N	Lwr. Back Panel (1)	¼ ply. - 31½ x 4
O	Drawer Fronts (2)	¾ x 6⅛ - 14½
P	Drawer Backs (2)	½ x 6⅛ - 14½
Q	Drawer Sides (4)	½ x 6⅛ - 10⅛
R	Drawer Bottoms (2)	¼ ply. - 10 x 14
S	Drawer Stops (2)	½ x ½ - 14½
T	Drawer Catches (2)	½ x ½ - 1

- (16) #6 x ½" Fh Woodscrews
- (2) #8 x 1" Fh Woodscrews
- (1) ¼"-dia. Cherry Dowel 24" long
- (4) Nylon Glide Strips
- (2) Drawer Pulls
- (8) ¼" Shelf Pins
- (8) 6d Finish Nails

CUTTING DIAGRAM

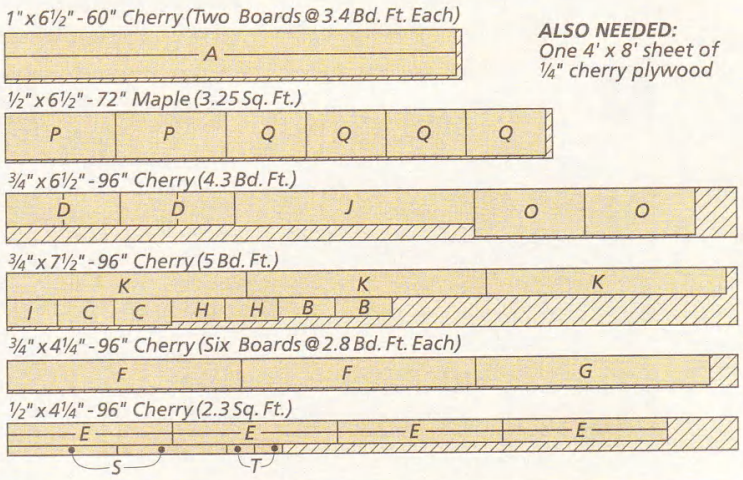

ALSO NEEDED:
One 4' x 8' sheet of ¼" cherry plywood

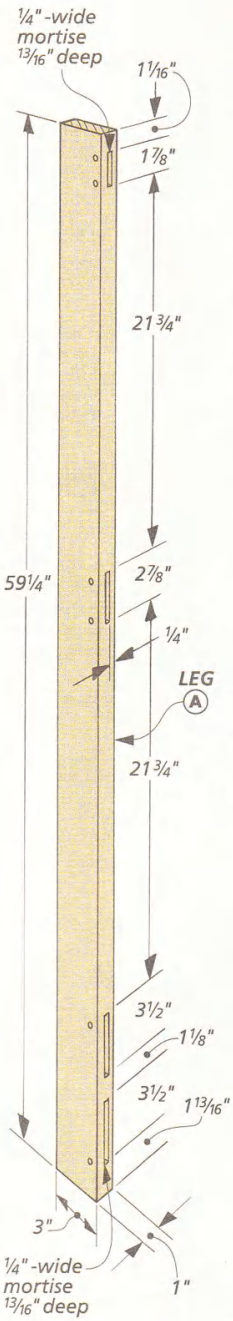

Side Assemblies

The two side assemblies don't look out of the ordinary, see drawing at right. But there's one thing to point out right away. The rails aren't centered on the thickness of the legs, as you might expect. That's because the sliding dovetails require that the inside faces of the legs and rails be flush, see detail 'b.'

LEGS. I started by cutting the **legs (A)** to finished size from 1"-thick stock, see drawing in margin. (3" x 59¼") Then I laid out the mortises for the rails.

The trick here is to lay out the ¼"-wide mortises so the rails will end up flush with the inside face of the legs. (The tenons will be centered on the rails.) This means the legs aren't identical; you should end up with two mirrored pairs.

Another thing to note is that there are two short mortises for the bottom rail, instead of a single tall (long) one, see margin. I did this to prevent the side walls around the mortise from becoming too fragile.

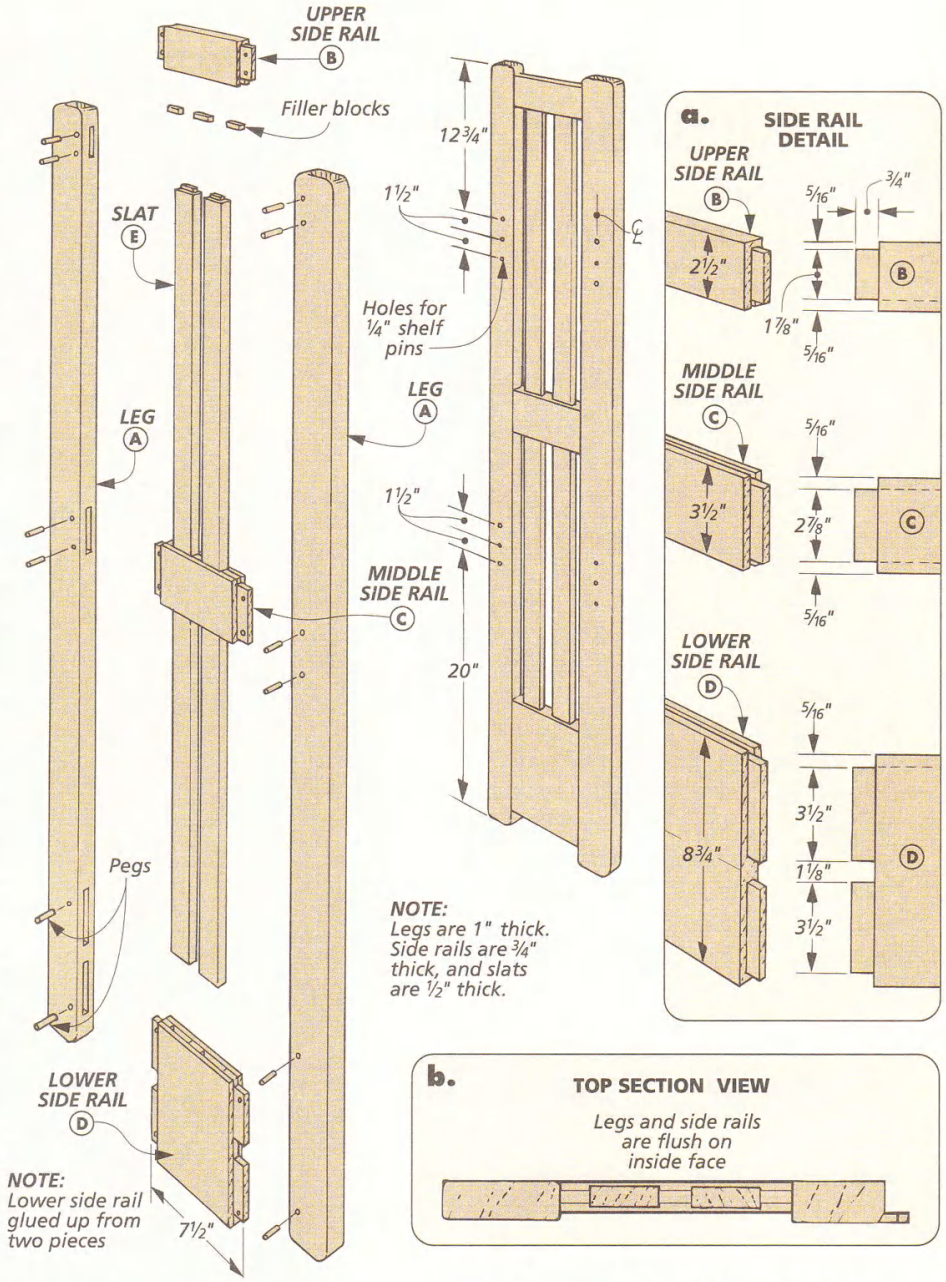

SIDE RAILS. When the mortises on the legs are complete, the **upper, middle** and **lower side rails (B, C, D)** that connect the legs can be cut to size from ¾"-thick stock, see detail 'a.' (I glued up each lower side rail from two pieces.)

Next, tenons can be cut on the ends of all the rails to fit the mortises in the legs. These tenons should be centered on the thickness of the rails, but the important thing is that the inside faces of the rails are flush with the legs after they're assembled.

As for twin tenons on the ends of the lower rail (D), they don't start off any different than the other tenons. Simply cut a single wide tenon first. Then lay out the inside shoulders and remove the waste between the tenons with the rail standing on end, see Fig. 1. To avoid creating a "stepped" shoul-

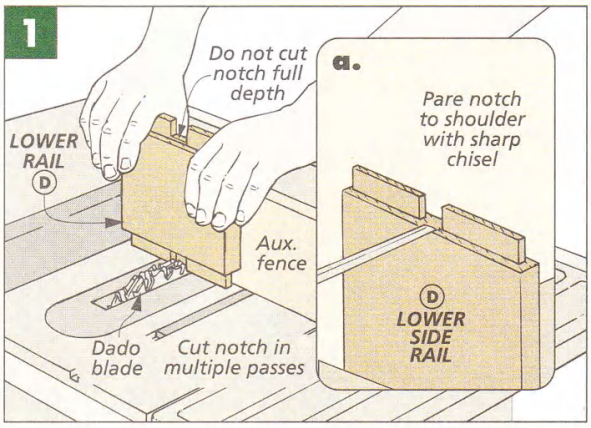

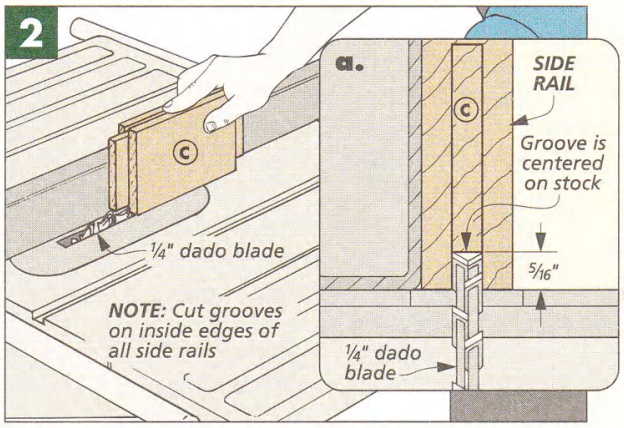

der, I didn't try to cut right to the shoulders. Instead, I carefully pared down to the shoulder with a sharp chisel, see Fig. 1a.

Finally to hold the slats, I cut a 1/4" groove 5/16"-deep along the *inside* edges of each rail, see detail 'a' at left and Fig. 2. Later I added small filler strips to these grooves to create mortises for the slats, refer to Fig. 3.

Now the legs and rails can be dry assembled to check the fit — and to measure for the length of the slats that span between the rails. The goal is to end up with the slats all the same length. But this means the middle rail has to be centered perfectly. If yours aren't, don't worry. There's a quick way to solve this problem, see Shop Notes on page 17.

SLATS. At this point, the eight **slats (E)** can be cut to size from 1/2"-thick stock, see Fig. 3. Just remember when cutting them to length to add 1/2" to the distance between the rails for the 1/4"-long stub tenons on the ends. (My slats were 1 3/4" x 21 5/8".)

Next, I cut the 1/4"-long tenons on the slats, see Fig. 3a. These allow the slats to fit into the grooves on the rails. Then to complete the "mortises" in the rails that hold these tenons, I glued 1/4" x 5/16" filler blocks into the grooves, see Figs. 3 and 3b. The outside blocks are 7/8" long; the center one is 1 1/4" long. And to position the blocks accurately, I cut spacers the same width as the tenon (1 1/2") to temporarily fit in the grooves. When the glue dries, sand the edges smooth to make sure the blocks are flush.

COMPLETE LEGS. The sides are about ready to be assembled. But first, there are a couple things to do to the legs.

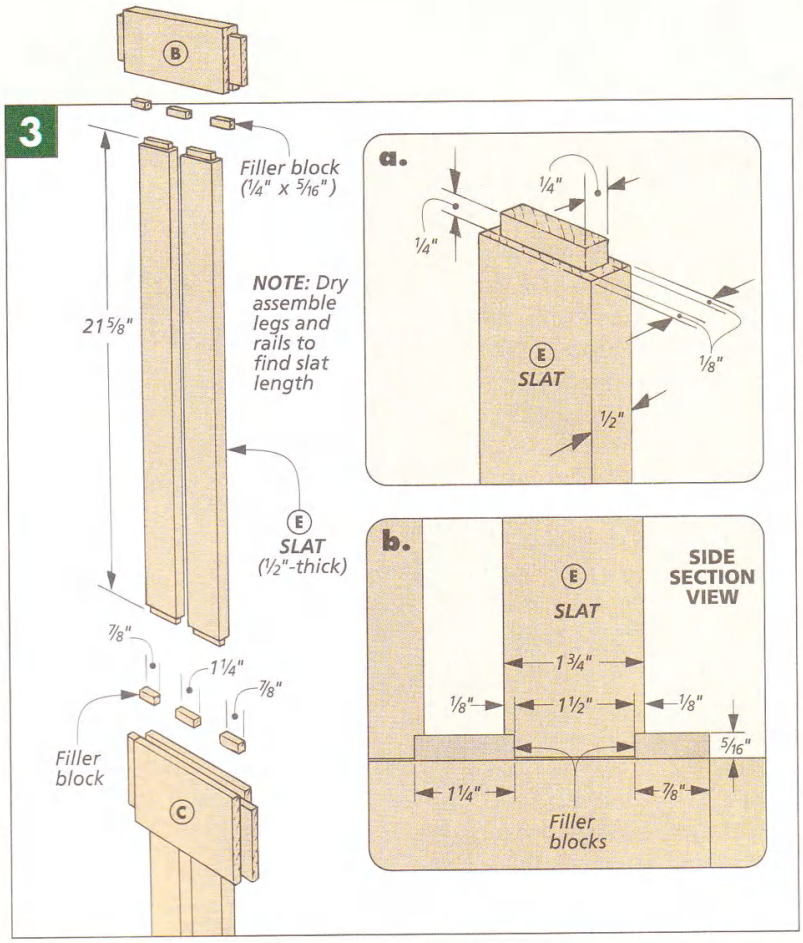

First, to hold the adjustable shelves added later, I drilled two sets of holes for the 1/4" shelf pins, see Fig. 4 and drawing on page 8. These holes are drilled on the inside face of each leg.

Next, I cut a 1/2"-radius on all four corners of each leg. I laid out each radius (see drawing in margin), and then roughed them out with a band saw and sanded them smooth.

ASSEMBLY. Now the legs, rails and slats are ready to be assembled. First I clamped the slats between the rails, see Fig. 4. (I didn't bother to glue the slats since they're trapped between the rails.) Then the legs can be fit over the tenons on the rails.

However, before you apply glue to the rail tenons, first dry assemble the side assemblies to make sure they will end up perfectly flat. This is important because of the sliding half dovetail joinery that will hold the shelves and side assemblies together. The flatter the sides (and shelves) are, the easier they will go together later.

ADD PEGS. After the side assemblies were glued together, I used 1/4" dowels to peg the tenons on the rails, see Fig. 5. To do this, I drilled 1/4"-dia. holes on the *outside* face of each leg, using a hand drill. Then I glued a short peg in each hole and trimmed it flush with a chisel, see Fig. 5a.

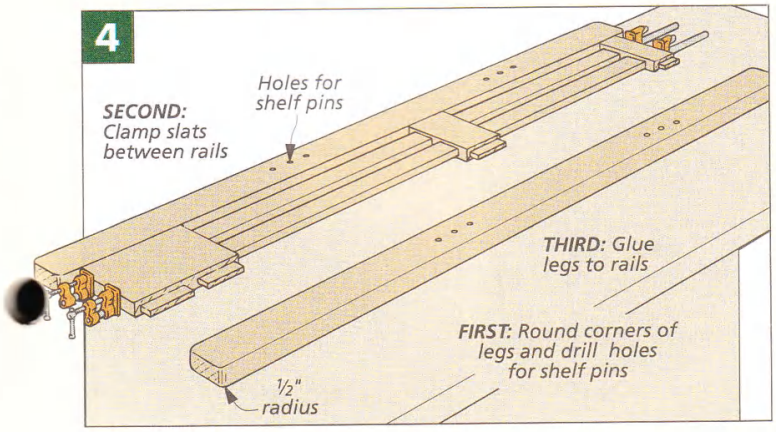

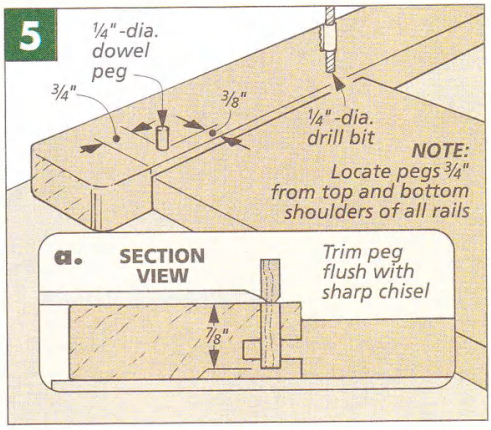

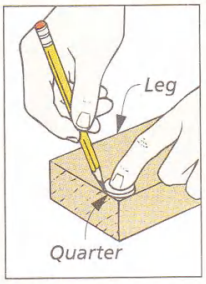

▲ *Trace around a quarter to quickly lay out the corners of the legs.*

Shelves

To connect the side assemblies with the shelves, I used sliding half dovetails. And now that the sides are assembled, it's time to tackle the grooves that will capture the dovetails on the shelves.

DOVETAIL GROOVES. The procedure isn't hard to understand. I clamped a shop-made router guide to each side assembly, see Fig. 6 and the article on page 14. And I routed each half dovetail in two passes: First routing the square top shoulder, see Fig. 6a. Then the dovetail on the bottom shoulder, see Fig. 6b.

But to get all the grooves parallel and square to the edges requires some careful work. I labeled the guide carefully so it was always oriented the same. And I always kept the router oriented the same too. And finally, to help keep the grooves the same width, I used a spacer when adjusting the guide to rout the dovetail, see page 14.

CUT RABBET. After all the dovetail grooves have been routed, I cut a rabbet on the inside edge to hold the back rails and panels which are added later, see detail 'c' above and Fig. 7. (This also cleans up any chipout that occurred when routing the grooves.)

SHELVES. With the side assemblies complete, I glued up all the panels for both the four **fixed (F)** and two **adjustable shelves (G)**, see drawing. (It's a good idea to glue up a couple panels extra long. This way, you can use the cutoffs as test pieces when routing the half dovetails on the ends.)

HALF DOVETAILS. When the fixed shelves are cut to finished size (11⅜" x 30¾"), you can rout the half dovetails on the ends, see Fig. 8. Test the setup using one of the cutoffs from the panels. And check it in *all* of the grooves on the side assemblies — they may not all be exactly the same.

The goal here is *not* a tight fit. You'll never get the shelves into the grooves.

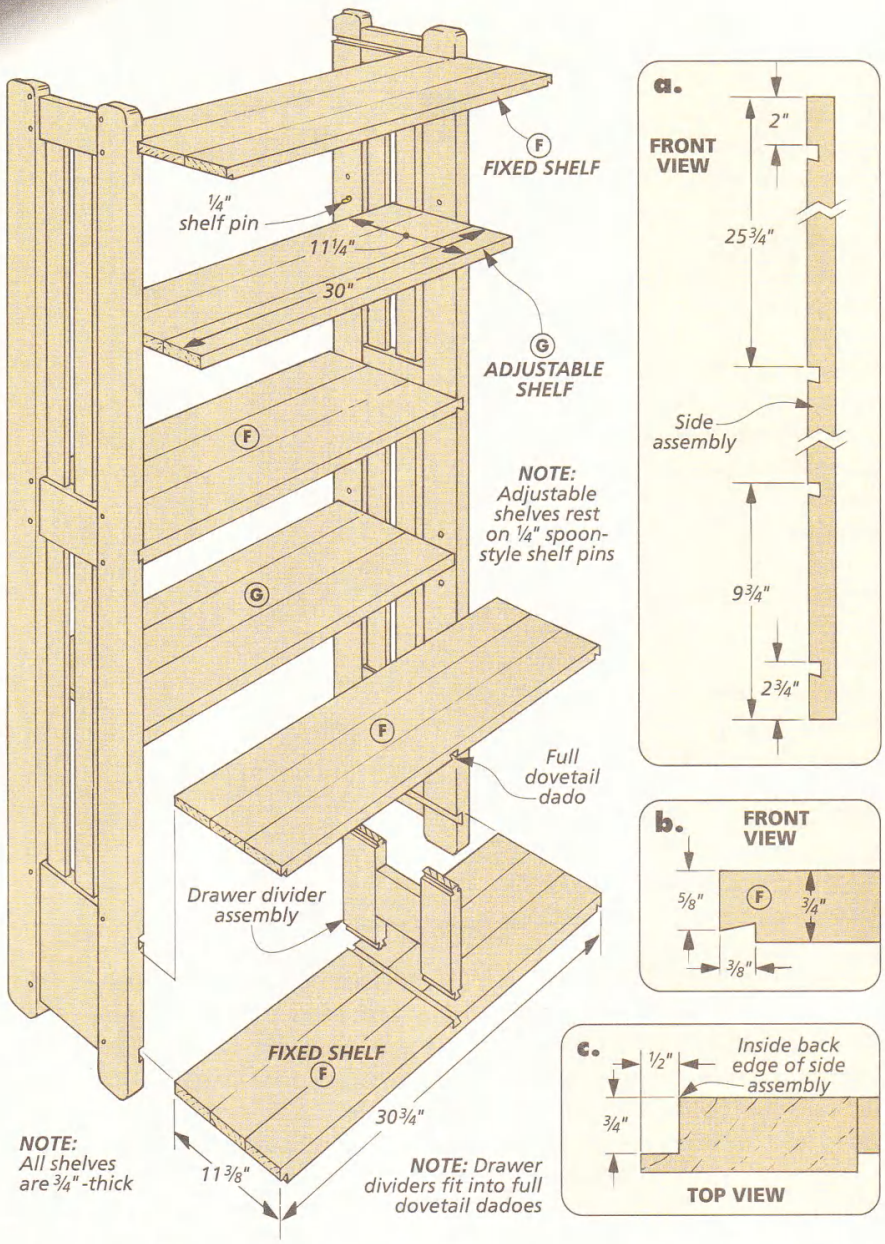

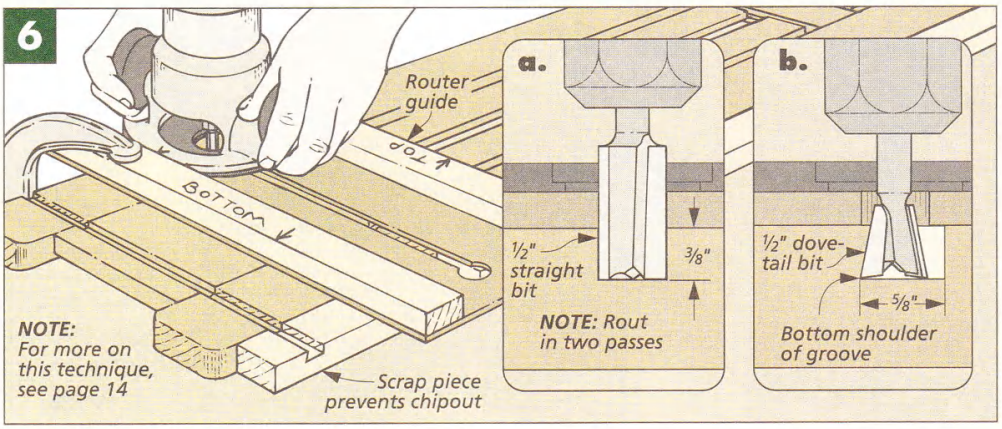

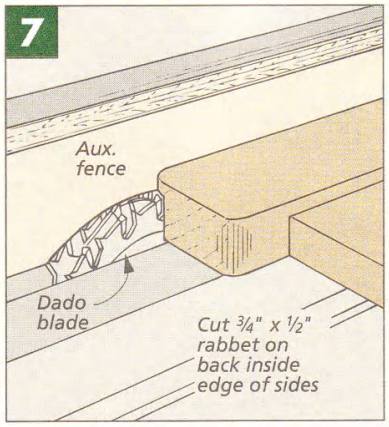

Instead, I sized the tails so they could be pushed into the grooves by hand *at least* half way. Then later when assembling the shelves, I used clamps to push them the rest of the way.

FULL DOVETAILS. After the half dovetails have been routed, the next step is to rout a full dovetail dado centered on the bottom two shelves. These are for a divider assembly that will separate the two drawers, refer to Fig. 11.

To rout the dado, I used the same router guide used earlier, see Fig. 9. But this time, rout the first pass with a ¼" straight bit to remove most of the waste, see Fig. 9a. Then without moving the guide, use the dovetail bit to rout the second pass, see Fig. 9b.

ASSEMBLY. Now the case can be assembled. I slid the shelves into one of the side assemblies and pulled them flush with the front edge using clamps. Then I slid the other side assembly onto the shelves, see Fig. 10. And I didn't use glue. Instead, each shelf is held with a finish nail, see Fig. 10a. (Set the nails and fill the holes.)

DRAWER DIVIDERS & GUIDE. Next, I added the drawer divider that slides into the dovetail dado routed earlier, see Fig. 11. Because small narrow pieces are easier to fit in the dado than a single wide panel, I made the assembly out of three parts: two narrow vertical dividers and a guide that connects them.

I cut the 3"-wide **dividers (H)** so their lengths matched the distance between the two dadoes (7"), see Figs. 11 and 11a. Then I routed the dovetails on the ends. This is similar to those on the shelves except that here the dovetails are routed on both faces. And since the pieces are only 3"-wide, they can fit a little tighter.

The dividers will be connected with a guide, so I cut a 3"-wide mortise on the inside edge of each, see Fig. 11a.

The guide is a 3½"-wide piece with tenons that fit the mortises in the dividers. But note that the final assembly should stop at least ⅞" short of the back edge of the sides so there's room for the back rails, see Fig 12a.

To add the drawer divider assembly, I first glued the front divider to the guide and glued the divider into the dadoes, see Fig. 12. Then I glued the back divider onto the guide. (But don't glue it into the dadoes.)

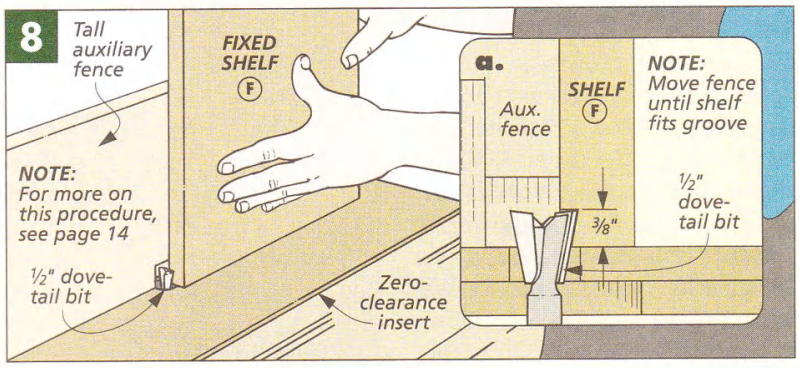

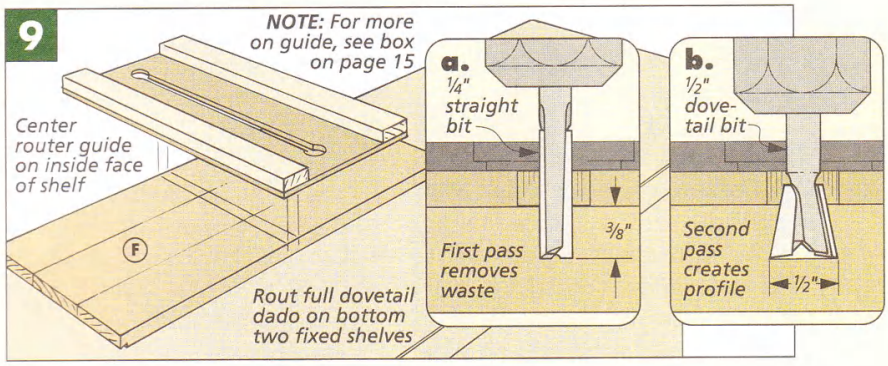

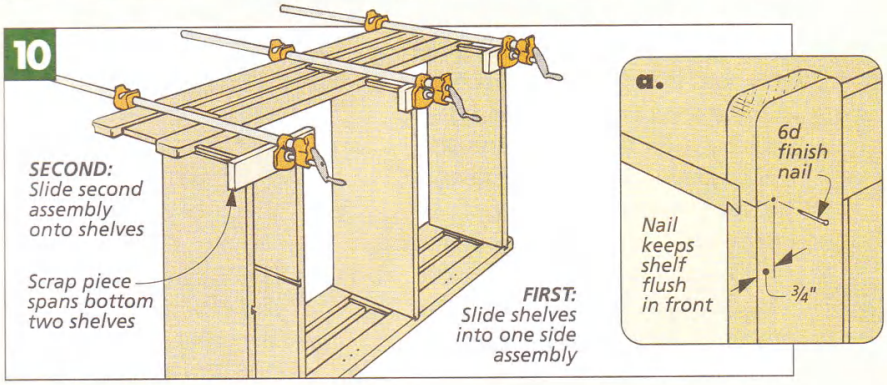

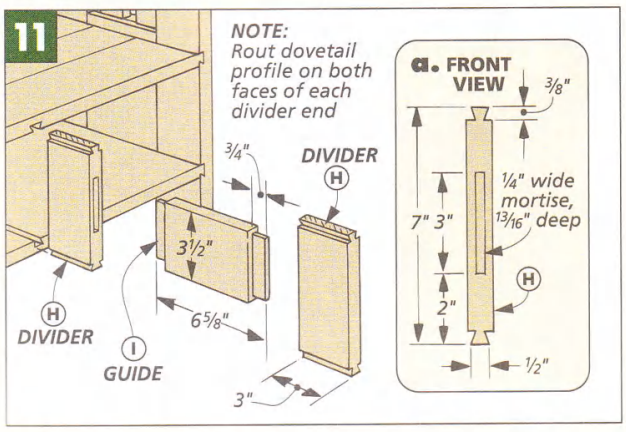

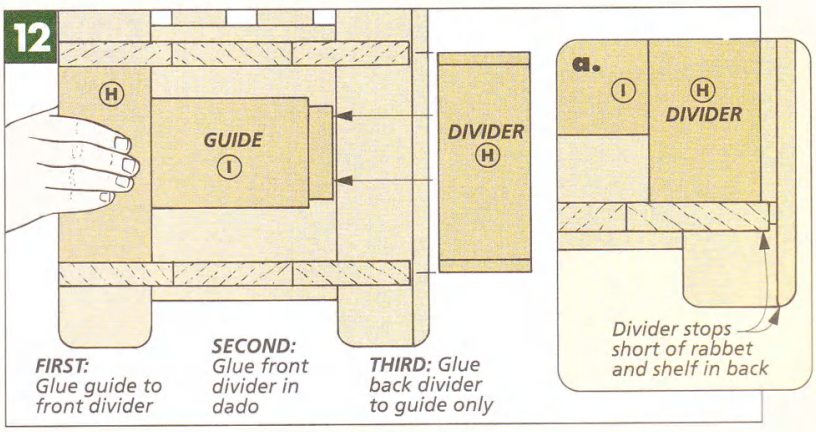

Back Rails & Panels

The sliding half dovetails hold the shelves and sides together, but they don't prevent the case from racking. So to do this, I added a "solid" back. This includes four back rails and 1/4" plywood panels, see drawing at right.

BACK RAILS. I didn't need to add *four* back rails to the bookcase. But they do more than support the back panels and stiffen the case. They also have grooves that fit over the fixed shelves, see detail 'a.' And there's plenty of room inside for the shelves to expand and contract, see detail 'a.'

I started by cutting the 4 1/2"-wide **upper back rail (J)** and the three 3 1/2"-wide **lower back rails (K)** to finished length (31 1/2"), see drawing.

Now there are three things to do to each rail, see detail 'b' at right:

First, cut a 1/4"-deep groove along the *inside* face to fit over the shelves. The grooves on the lower rails are centered. The one on the upper rail is located 1" from the bottom edge.

Second, cut a rabbet on the ends of each rail to create a 1/2" x 3/4" tongue. These tongues will fit into the rabbets on the back of the sides.

And finally, to hold the back panels, you can cut rabbets on the back inside edges of the rails — the bottom edge of the upper rail, the top edge of the rail on the bottom, and *both* edges of the rails in the middle.

Now the lower rails (K) can be attached to the back of the bookcase, see drawing. All you have to do is set the groove in front over the shelf and then screw the rail in place.

UPPER RAIL. Because the upper rail connects to the rounded top corner of the leg, there's some shaping to do before the rail can be attached to the case, see photo in left margin.

To create the rounded shoulder on top, I set the rail in place and marked the top edge of the leg, see Fig. 13. Then I cut the notch with a hand saw.

Next, I rounded over these square shoulders, Fig. 14. To do this, I used a band saw to rough out the 3/4"-radius before sanding them smooth. Then I screwed the rail to the case.

The rail still isn't done, though. The square edge of the tongue needs to be rounded over to match the radius on the leg, see Fig. 15. But this time, I used a rasp to do the rough shaping.

BACK PANELS. Finally, the back panels can be cut to fit the rabbets in the rails and sides, see drawing. The **upper, middle** and **lower panels (L, M, N)** are all the same width, but their lengths (heights) will be different.

To attach the backs to the case, I simply glued them. Then I lightly softened all the edges of the bookcase with 220-grit sandpaper.

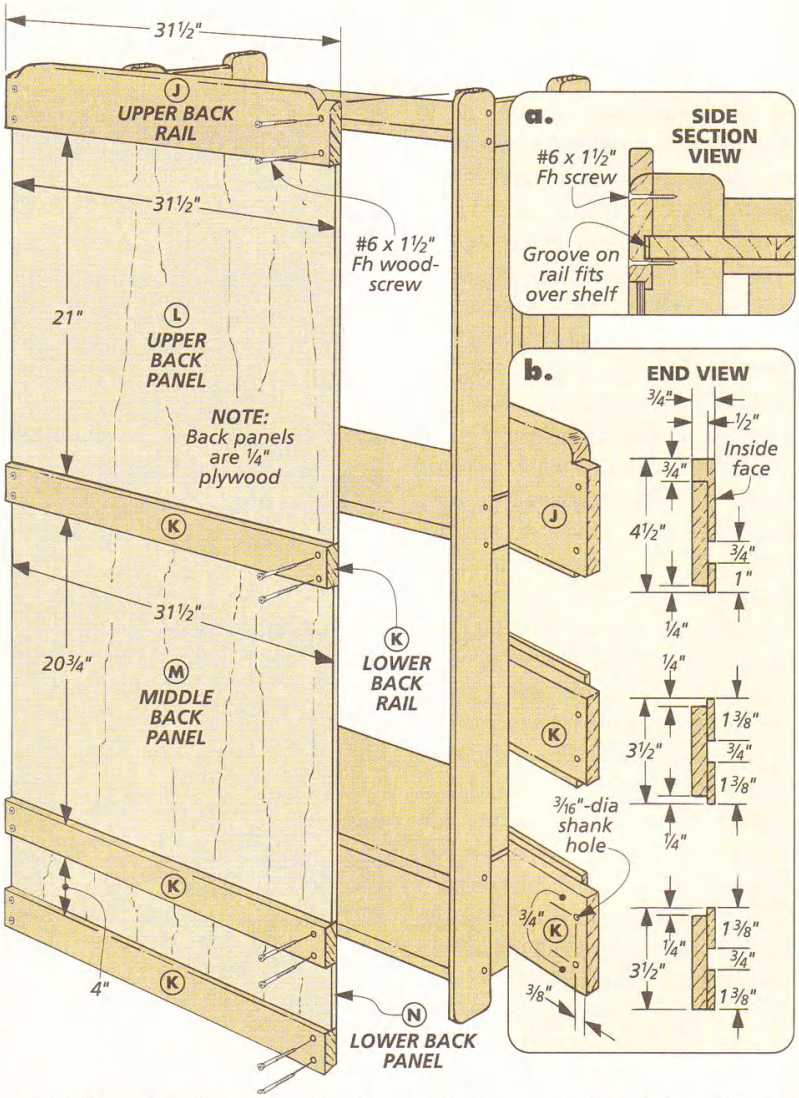

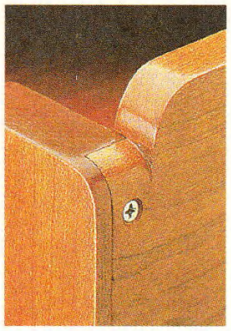

▲ *To match the roundover on the legs, the back rails require a little extra shaping.*

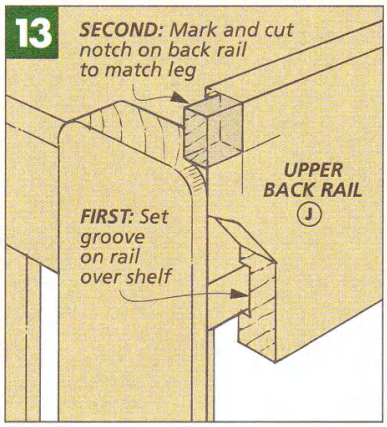

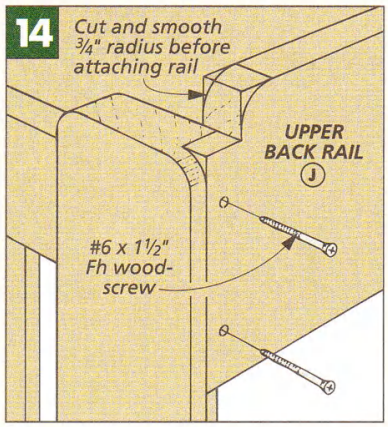

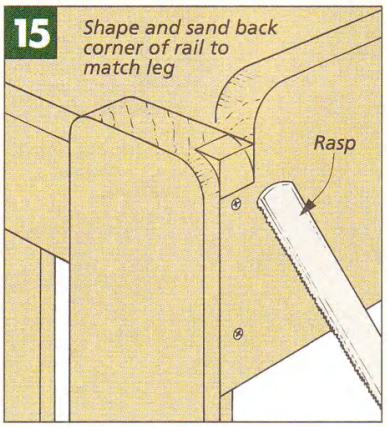

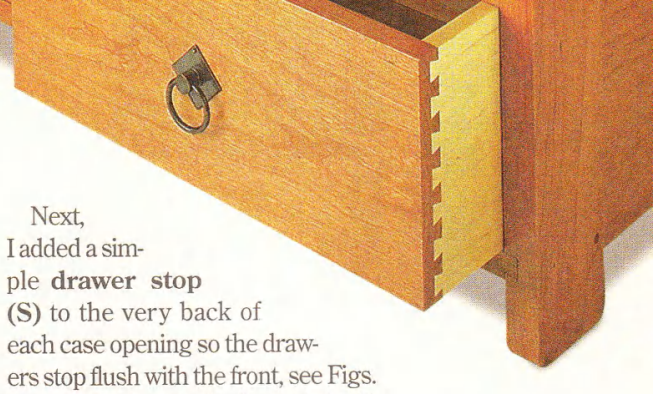

Drawers

All that's left now is to build the two small drawers that fit the openings at the bottom of the case, see photo above right. I joined my drawers with ½" dovetails, routing them with a dovetail jig. But if you don't have a dovetail jig, you can use a locking rabbet to join the pieces, see lower photo at right and Shop Notes on page 16.

To make the drawers, I started by measuring the openings in the case. (Mine were 6¼" x 14⅝".) Then the ¾"-thick **drawer fronts (O)** and ½"-thick **backs (P)** can be cut to finished size, see Fig. 16. I sized them to allow for a 1/16" gap around each edge (6⅛" x 14½"), see Fig. 16b. Note: If you build the drawer with locked rabbets, the dimensions of some of the pieces will be slightly different, see page 16.

Next, I cut the four **drawer sides (Q)** to size from ½"-thick stock. The length of these pieces depends on the depth of the case. I wanted the drawers to stop short of the back rails, so I cut my sides 10⅛"-long, see Fig. 16. (The drawer ended up 10¾" deep, which left a ½" gap at the back.)

With the pieces cut to size, the dovetails can be routed. And to hold the ¼"-thick plywood bottom panels, I cut a ¼"-deep groove near the bottom edge of the drawer pieces. (Locate the groove so it's centered on the bottom tail on the sides.)

After cutting the **drawer bottoms (R)** to size, the two drawers can be glued together, and pulls can be mounted to the fronts of the drawers, see Fig. 16a. (I used a Craftsman-style ring pull with a diamond-shaped plate. For sources, see page 35.)

Though the drawers are built, there are still a few details to work out. First, to help the drawers ride smoothly and prevent them from wearing grooves in the shelf the drawer rides on, I added two nylon guide strips to the bottom of the case, see Figs. 17 and 17b. (These were 1/16"-thick.)

Next, I added a simple **drawer stop (S)** to the very back of each case opening so the drawers stop flush with the front, see Figs. 17 and 17a. And finally, I cut a ½" x ½" notch in the back of each drawer and added small turn button **catches (T)** near the front of the case. These catches prevent the drawers from being pulled all the way out. W

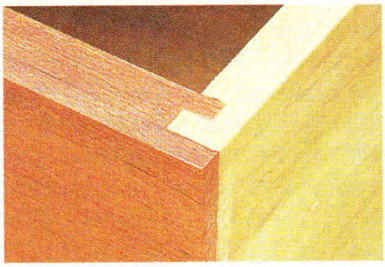

▲ *You don't need a dovetail jig to build the drawers. A locking rabbet joint will also work, see page 16.*

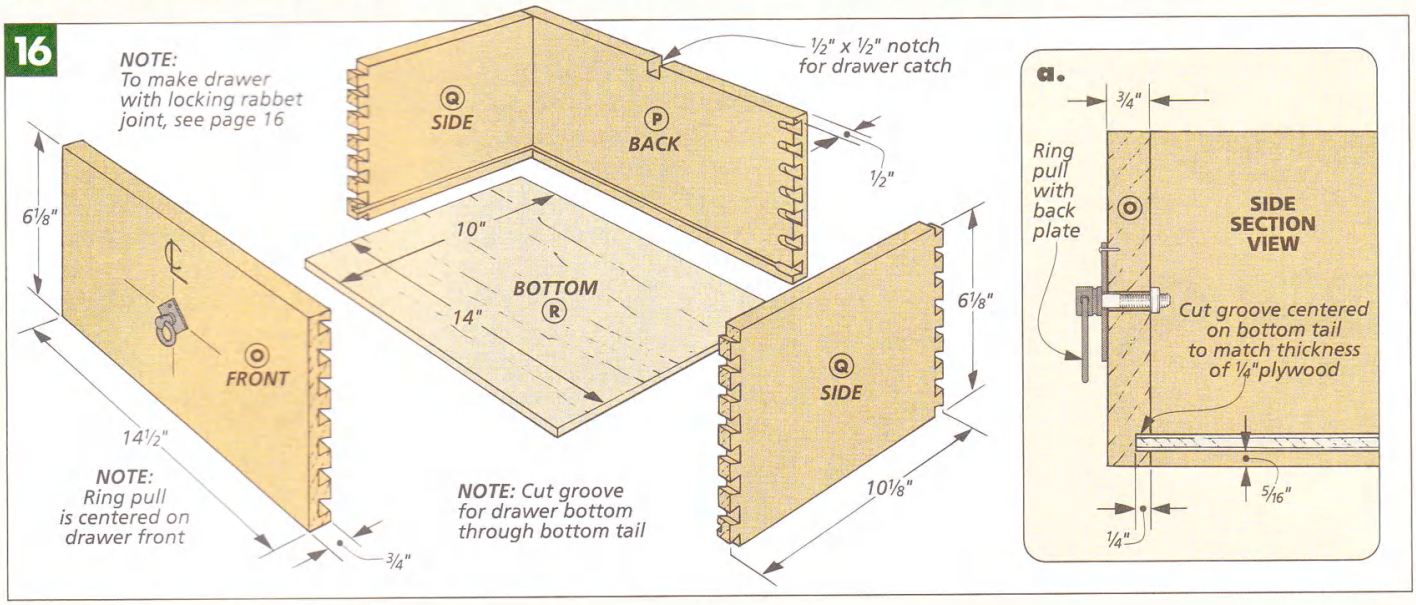

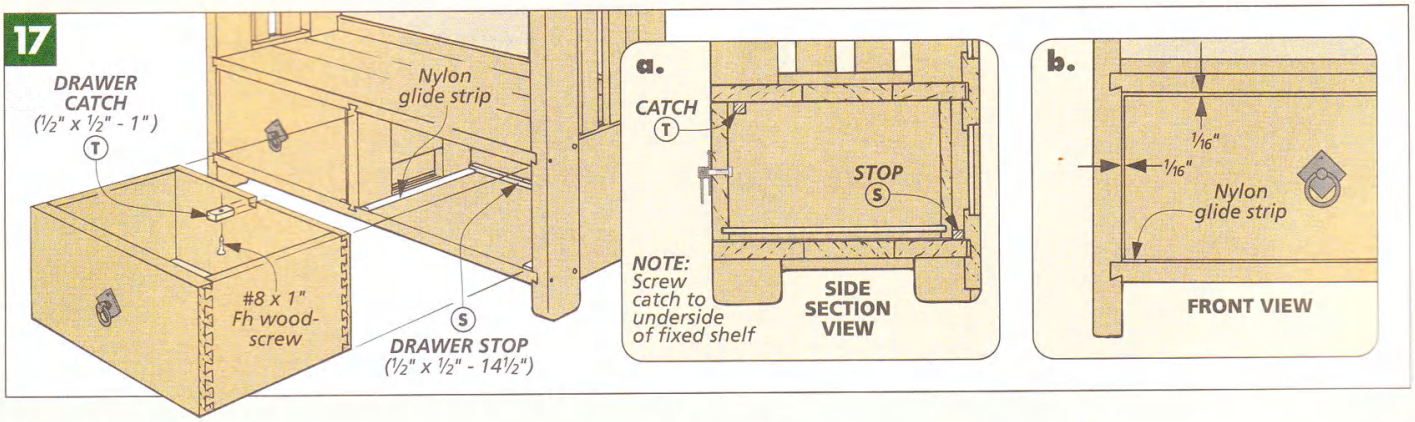

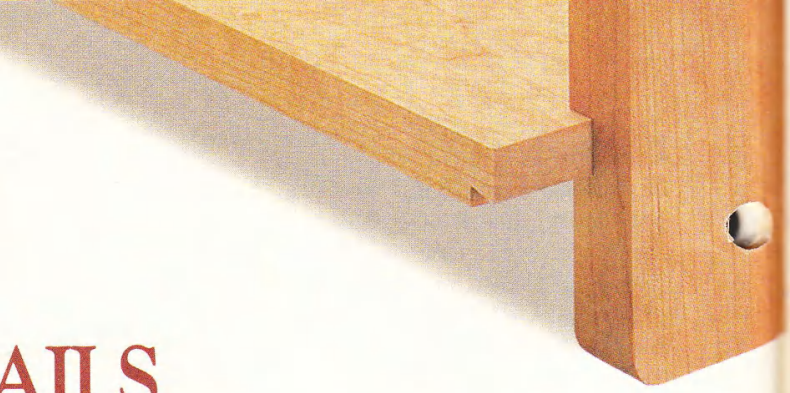

SLIDING HALF DOVETAILS

As we were designing the bookcase on page 6, our first instinct was to simply glue the shelves into some grooves in the case sides. But since these solid wood shelves are going to expand and contract with changes in humidity, chances are the end grain glue joints would have failed.

What we decided on was a groove — with a slight modification. We added a dovetail profile to its bottom shoulder. This created a sliding half dovetail that provides a mechanical "lock" between the shelves and the bookcase sides, see the photo above. And because the half dovetail holds the shelf securely, you don't even need to use any glue.

The nice thing about this joint is that you get the strength of a dovetail, but you don't have the difficulty of fitting a full sliding dovetail (one with the profile on both the top and bottom). And to make it as easy as possible to fit the half dovetails, we came up with a way to make the size of the grooves more consistent by using an easy-to-build guide and a guide spacer, see box on the next page.

Creating sliding half dovetails is a two-step process. First, the grooves are routed on the insides of the side assemblies. Then the tails are created on the ends of the shelves.

HALF DOVETAIL GROOVES

To create sliding half dovetails, the first step is to rout the grooves in the case sides that the tails will slide into. Making these grooves also requires a couple steps. First, a groove (or dado) is routed with a ½" straight bit. Then a second pass is made along the bottom shoulder of this groove, this time using a ½" dovetail bit.

Before routing however, there are a few things to do. First, on the inside face of *one* of the side assemblies, lay out the *top* shoulder of each groove, see Fig. 1. Next, to prevent chipout on the front edge, carpet tape a scrap piece to it, see drawing in margin at left. (On the bookcase, the chipout on the back edge was cleaned up by a rabbet that was cut later.)

STRAIGHT BIT. Now you can mount a straight bit in the router and set it to cut a ⅜"-deep groove, see Fig. 2a. Shop Tip: I routed a couple test grooves on a scrap piece. This came in handy when setting the depth of the dovetail bit later.

At this point, the router guide can be clamped to the side so its slot is flush with the layout line. (Use a square to make sure the guide isn't

SHOP TIP

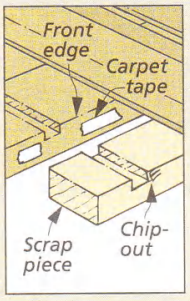

Before routing the grooves, carpet-tape or clamp a scrap piece to the front edge of each side assembly to prevent chipout.

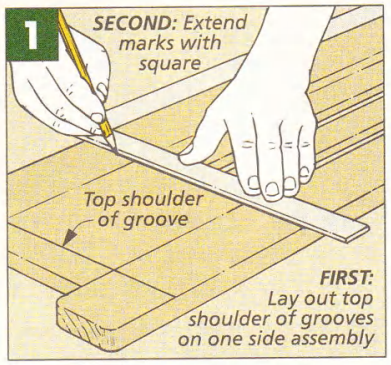

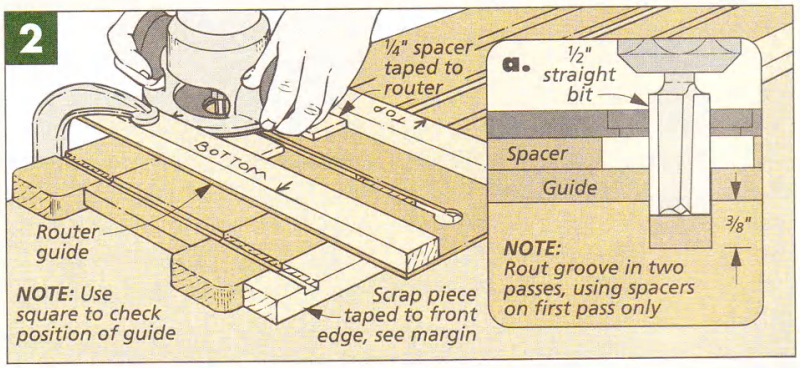

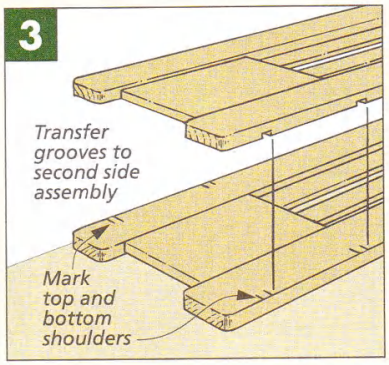

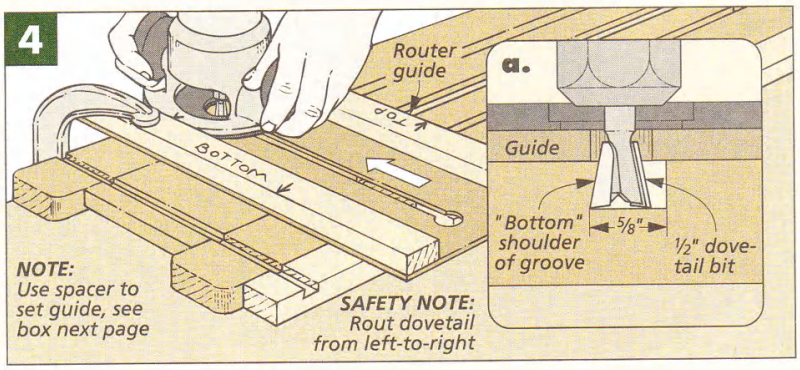

angled, and double check that you're routing on the correct side of the line.)

When routing this groove, I made two passes. (3/8" is a bit much to try to remove in a single pass.) So on the first pass, I carpet-taped a pair of 1/4" spacers under the base of the router to "raise" the bit, see Figs. 2 and 2a. Then I removed the spacers for the second pass. (Since the bit may not be perfectly centered on the router base, it's important to keep the router oriented the same with each pass.)

After the grooves are routed on one side assembly, transfer their position to the other side to make sure the grooves will align perfectly, see Fig. 3. Now you can rout the grooves on the second side assembly just like you did the first, see Fig. 2.

DOVETAIL BIT. At this point, I shaped the bottom shoulder of each groove by making a single pass with a 1/2" dovetail bit, see Fig. 4. But first you have to shift the router guide so the groove ends up 5/8"-wide, see Fig. 4a. (I used a spacer to do this, see below.)

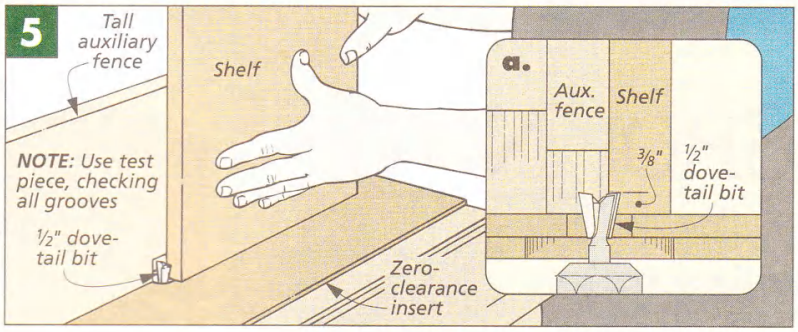

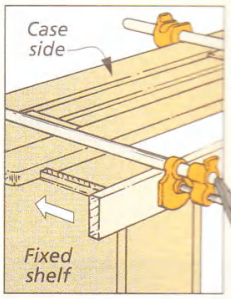

▲ *The dovetails are sized to easily slide in half way. Then clamps push the pieces the rest of the way.*

HALF TAILS

With the grooves routed on the side assemblies, the next step is to rout the matching half tails on the ends of the shelves. The same 1/2" dovetail bit is used, but this time, I used the router table with a tall fence to support the workpieces, see Fig. 5.

To set up this cut, I first set the height of the bit to match the depth of the grooves (3/8"), see Fig. 5a. Then I adjusted the router fence to sneak up on the final size of the dovetail.

The trick, of course, is getting the right fit. You don't want the shelf too loose. But if it's too tight, you'll never slide the shelves all the way into the side assemblies. On the bookcase, I set the fence so each shelf would easily slide halfway into the groove. Then I finished the job with some clamps, see margin drawing at right.

Shop Note: To test the setup, I used a cutoff from one of the shelf panels. And it's a good idea to check the test piece in all the grooves to make sure there are no surprises.

When the test piece fits, the dovetail profile can be routed on both ends of the shelves, see Fig. 5. Then you can begin to assemble the shelves and case sides, refer to page 11. W

ROUTER GUIDE & SPACER

The key to routing the dovetail grooves is this simple guide. It's made up of two hardwood strips that sandwich the router base and a piece of 1/4" hardboard the base rides on, see drawing at right.

GUIDE. What's important is that the space between the guide strips equals the base of the router, see detail 'a' at right. Also, you want the outside edges of the strips parallel with their inside edges. (This way, you can use a square to check the position of the guide.)

When the strips have been glued to the hardboard base, I drilled a couple 1"-dia. holes near the ends to provide clearance for the router bits. Then I routed a 1/2" slot between the clearance holes. Note: Mark your router and guide carefully so that both are always oriented the same.

GUIDE SPACER. When it came time to move the guide for routing the half dovetail on the bottom of the groove, I decided to use a simple spacer, see drawing. This keeps the grooves as consistent as possible.

The spacer should fit tight in the 1/2" slot in the guide. And there's a 1/8" rabbet cut on one edge so both the guide and spacer can be shifted 1/8" towards the bottom edge of the side. (See the drawings below for how to use the spacer.)

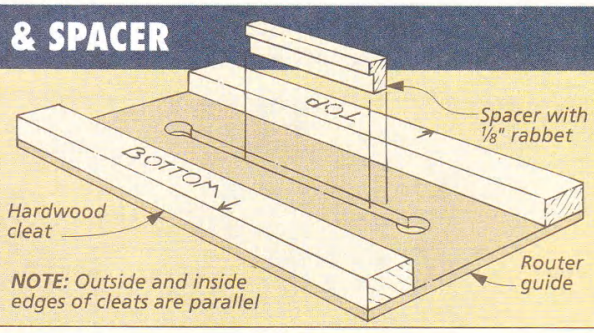

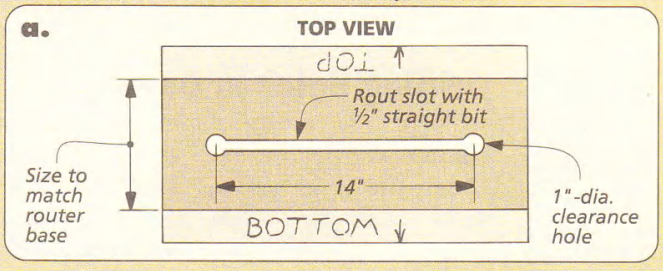

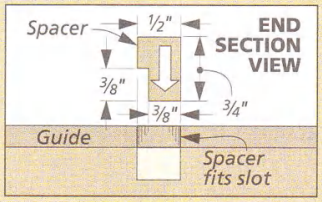

Create Spacer. To offset the guide consistently, make a spacer to fit in the guide. Then cut a 1/8" rabbet on one edge.

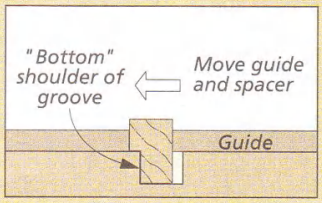

Move Guide. With the spacer in place, move the guide and spacer as far as you can towards the bottom of the side.

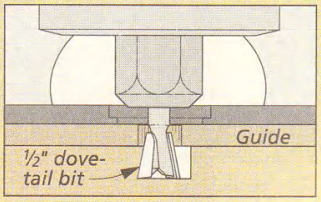

Rout Dovetail. Now the dovetail bit will automatically rout along the bottom edge, creating a 5/8"-wide groove.

SHOP NOTES

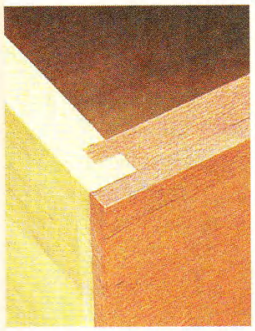

▲ *In a locking rabbet joint, a dado on the drawer side fits over a tongue on the drawer front.*

Locking Rabbets

If you don't have a dovetail jig, you can make the drawers for the bookcase shown on page 6 with locking rabbet joints instead.

There's not much to a locking rabbet joint. A dado in the side of the drawer fits over a tongue cut on the end of the drawer front, locking the two pieces together, see photo. To make the joint, all you need is a table saw.

Shop Note: The dimensions of the drawer sides and back are slightly different than the dovetailed drawer, see drawing.

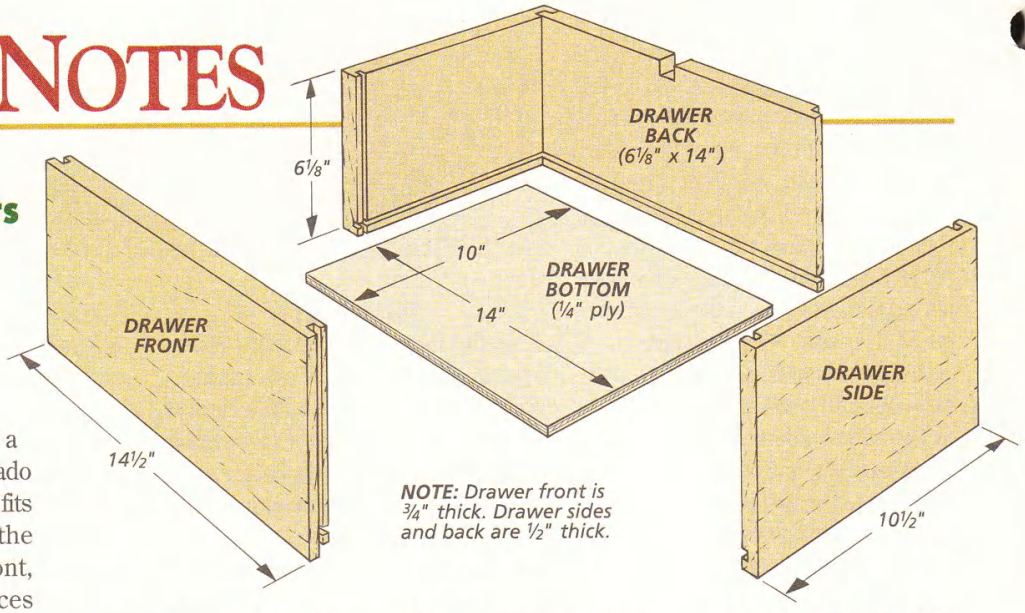

To make the joint, the first step is to cut a ¼"-wide slot on the ends of the drawer front, see Fig. 1. This slot is centered on the thickness of the workpiece.

The depth (height) of the slot should match the thickness of the stock you're using for the drawer sides.

The next step is to trim away part of the drawer front along the back to create a "tongue," see Fig. 2.

Now all you have to do is cut a dado on the drawer side to fit over the tongue on the front of the drawer, see Figs. 3 and 4.

To attach the back of the drawer, just flip the drawer side around and cut a second dado on the other end.

Then cut a rabbet on each end of the drawer back to create tongues that fit in the dadoes on the drawer sides, see drawing above. W

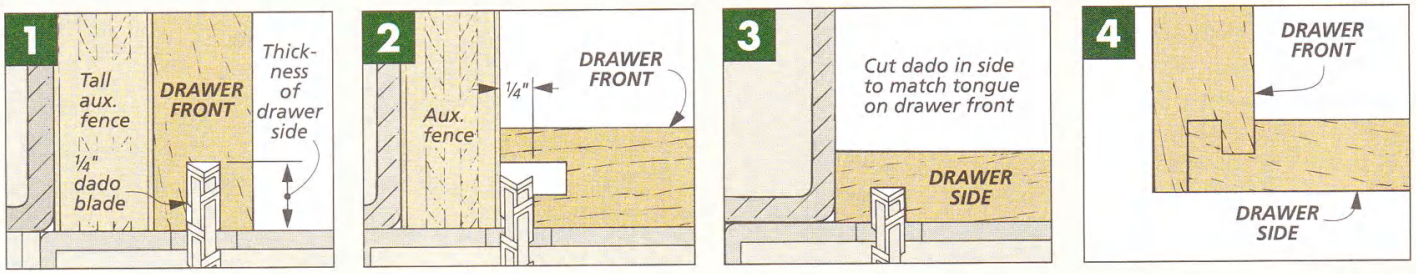

Drilling Holes in Dowels

In order to epoxy a machine screw into the end of the posts for the holiday lantern (see page 18), I had to drill a small hole on one end of each post. But trying to drill into the end of a dowel can be tricky. So I made a simple jig.

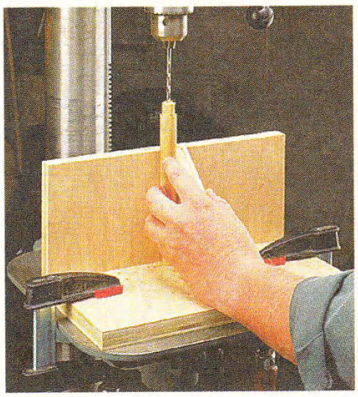

This jig consists of nothing more than an "L"-shaped fence made out of plywood scraps. A diagonal cross brace is screwed to the jig to provide vertical support, see drawing.

To use the jig, clamp it to the drill press. Then hold the dowel against the fence and the brace while drilling the hole, see photo. W

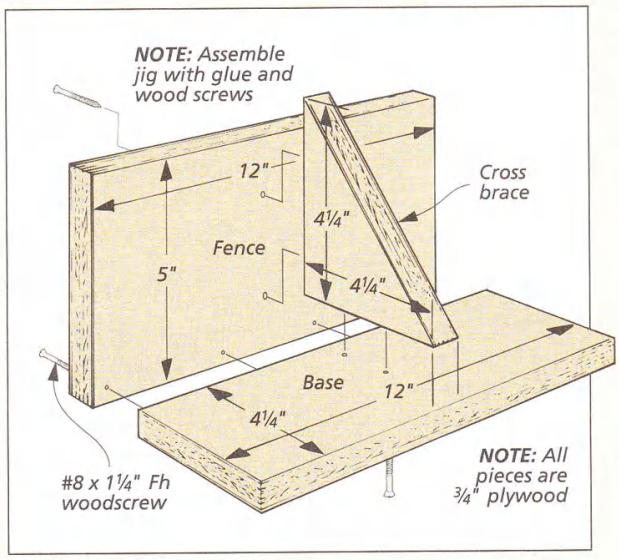

Adjusting a Rail

When I was making the sides of the bookcase, I wanted to position the middle side rail directly in between the upper and lower side rails. This way the slats could all be cut to the same length.

But when I dry assembled the legs and rails, I discovered that on one of the sides, the distances between the middle rail and the upper rail were slightly (1/16") longer than the distance between the middle rail and the lower rail.

In order to keep all the slats the same length, I "raised" the middle side rail so it was positioned an equal distance between the upper and lower side rails.

To do this, all you have to do is pare away a small amount of material from the shoulders of the tenons until the middle rail is centered between the upper and lower rails, see drawing below and detail 'a.'

To move the middle rail up, trim the top shoulders. To move it down, trim the bottom shoulders, see drawing at right.

Shop Note: When trimming the tenons, keep in mind that you only need to trim off *half* the amount of error. (In my case, I shaved off about 1/32".)

If the fit of the mortise is a little loose, don't worry. When the sides are assembled, the slats will help center the middle rail. W

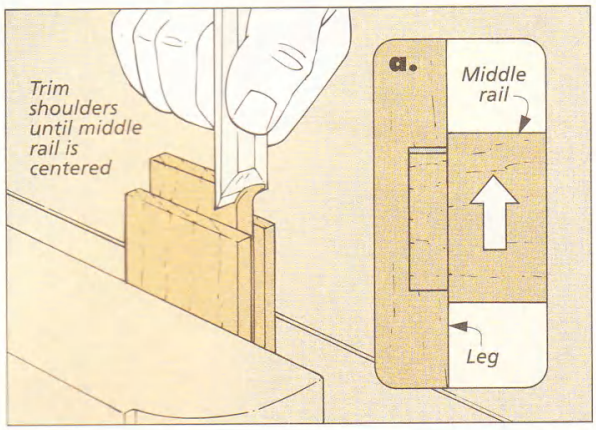

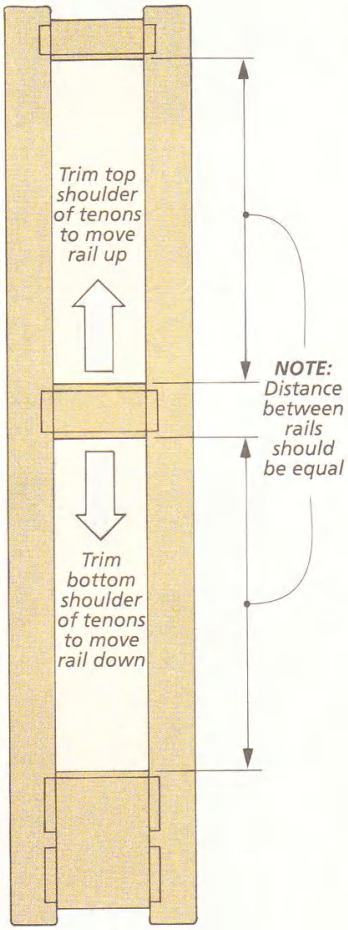

Mortising a Catch

Installing the catch on the desk clock shown on page 28 isn't difficult, but it does require a little patience and some sharp chisels.

The catch I used has two parts — a spring-loaded catch and a strike plate. I started with the catch.

First, I chiseled out a short, deep mortise for the spring-loaded catch mechanism, see Fig. 1. The depth and width of this mortise is sized to match the mechanism, but the length is a little more tricky.

The mortise has to be long enough to allow for the throw of the catch mechanism — but no longer. If you make the mortise too long, there won't be any material left for fastening the escutcheon pins.

The second step is to cut a shallow mortise so the inside face of the catch is flush with the edging, see Fig. 1a. Once this is done, the catch can be secured in place with the escutcheon pins provided.

To locate the position of the strike plate, insert the strike into the catch. Then close the clock to lay out the mortise, see Fig. 2.

To mortise the strike plate, just make a small dimple in the edging to allow for the rivet on the back of the plate. Then mortise the inside edge of the plate flush with the edging of the clock so the two halves close properly, see photo in margin. W

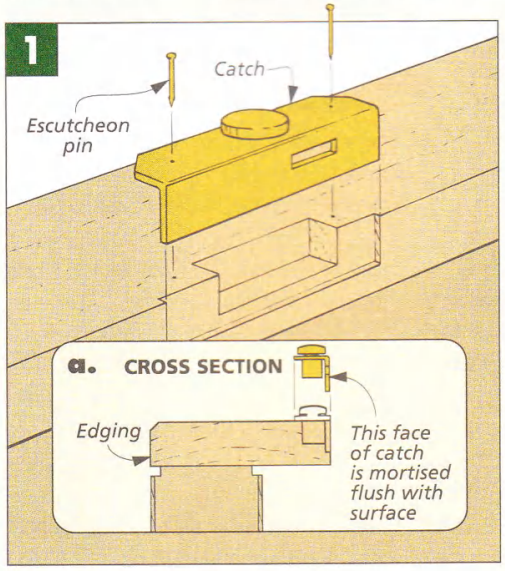

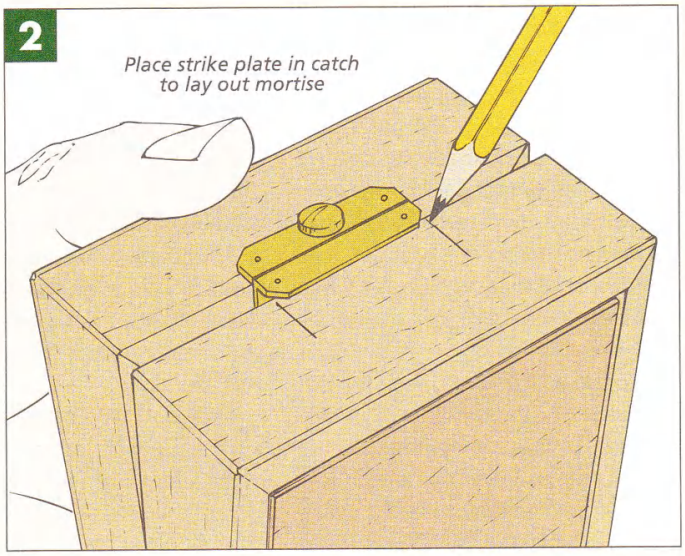

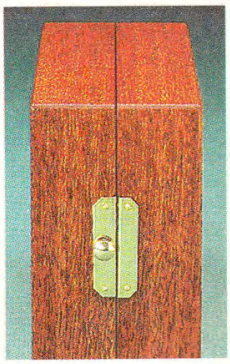

▲ *There should be an even gap all around the clock when the two halves are closed.*

HOLIDAY LANTERN

All it takes is a scroll saw and a light bulb to create some holiday magic. Plus, the removeable panels make it easy to change the scenery.

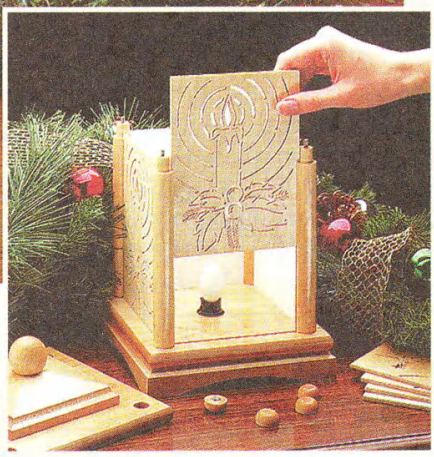

▲ *The top of the lantern comes off, and the panels slide out for replacement. Inside, a small bulb provides the illumination.*

Lights and the holiday season always seem to go together. And that's the basic inspiration behind this holiday project. We based our design after an old-fashioned lantern. But instead of glass sides, we used wood panels with scroll-sawn patterns. And instead of a wick, we substituted a small light bulb. So when you turn on the switch, a warm holiday scene lights up.

We had a lot of fun coming up with the patterns for the panels of this lantern. In fact, we couldn't decide on just one. So we're offering four different scenes so you can be the judge, see the patterns on the opposite page and also on page 23.

And you don't have to choose just one pattern. Instead, we've designed the lantern so the panels are removeable, see inset photo. The panels fit into grooves that are cut in the posts and top and bottom of the lantern. This way, you can make as many different designs as you wish and simply switch them whenever you feel like it.

REMOVEABLE TOP. Making the panels interchangeable meant that the top of the lantern had to be removeable. We tried a couple of different fancy ideas for fastening the top to the posts, but in the end the solution we came up with was a simple one.

We simply epoxied a small threaded stud into the top of each post. The top fits over the ends of the posts, and four nuts thread onto the studs to hold it in place. Then we "camouflaged" the nuts with some commonly available wood "hub caps," see detail on opposite page.

Construction Details

OVERALL DIMENSIONS:
6⅞"W x 6⅞"D x 10"H

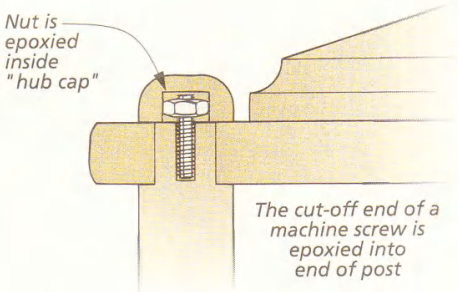

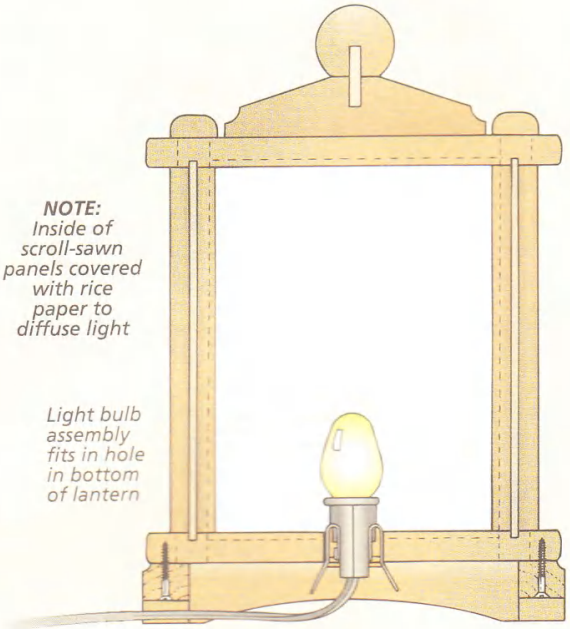

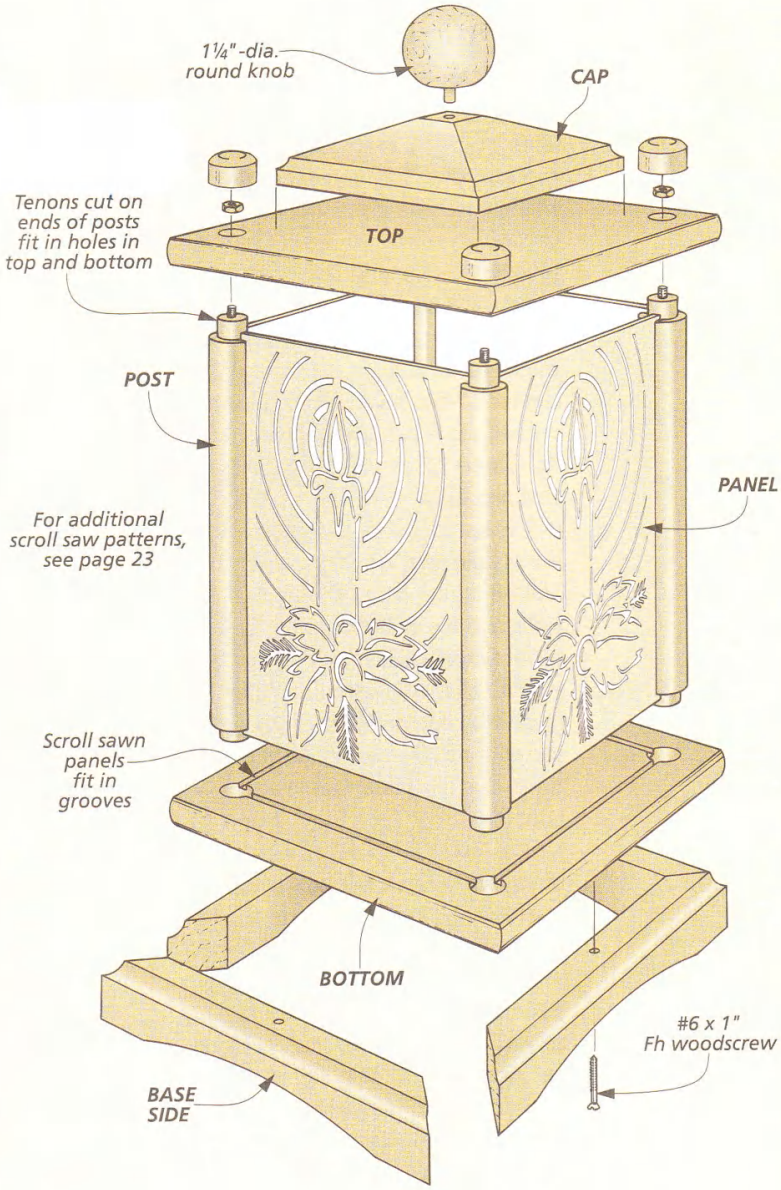

MATERIALS

A	Top/Bottom (2)	½ x 6¾ - 6¾
B	Posts (4)	¾ dia. - 7
C	Panels (4)	⅛ ply. - 4¾ x 6¼
D	Base Sides (4)	¾ x 1 - 6⅞
E	Cap (1)	1 x 4¼ - 4¼

SUPPLIES

- (4) ¾" x ⅜" Birch Hub Caps
- (4) 8-32 Nuts
- (4) 8-32 x 1" Machine Screws
- (4) #6 x 1" Fh Woodscrews
- (1) 1¼" x 1⅛" Round Ball Knob
- (1) 3⁄16"-dia. dowel ⅞" long
- (1) Light Socket
- (4) Rice Paper Sheets 5" x 7" (rough)

CUTTING DIAGRAM

½" x 7" - 18" Maple (.88 Sq. Ft.)

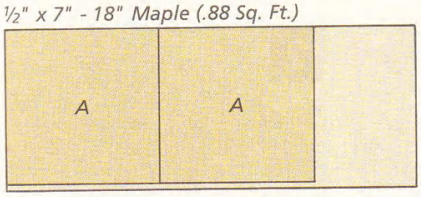

¾" x 2½" - 18" Maple (.31 Bd. Ft.)

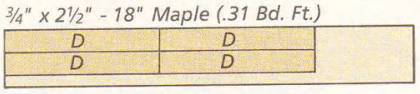

1" x 5" - 5" Maple (.22 Bd. Ft.)

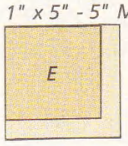

*Also Needed: 24" x 24" sheet of ⅛" Baltic birch plywood and one ¾"-dia. hardwood dowel (36"long).

CANDLESTICK PATTERN (Enlarge 200%)

Top, Bottom & Posts

Before sitting down at the scroll saw, I built the framework of the lantern. This is nothing more than a ½"-thick top and bottom supported by four round posts. Then after the main body of the lantern was complete, I cut the plywood side panels to fit.

TOP & BOTTOM. The **top** and **bottom (A)** are both made out of solid ½"-thick stock. They're cut square, and then a ½"-dia. hole is drilled in each corner, see drawing at right and detail 'b.' These holes will hold the posts that are added later.

The bottom piece also gets an additional hole for the bulb assembly that will be added later. This is a 1"-dia. hole, and it's drilled right in the center of the workpiece, see drawing.

With all the holes drilled, the next step is to rout the bullnose profile on the edges of the pieces. All you need to do this is a router table and a ⅜" round-over bit, see Figs. 1 and 1a. (Shop Note: To avoid chipout, rout along the end grain edges first.)

The last step to complete the top and bottom is to rout narrow grooves in between the holes to hold the side panels that are added later. The grooves are ⅛" deep and ⅛" wide, see drawing and detail 'b' at right.

To make these grooves, I again used the router table. But because the router bit is completely covered by the workpiece, it's difficult to tell where to start and stop the groove. So I clamped a couple of stop blocks to my router table fence, see Figs. 2 and 2a. This way, you won't push the workpiece too far and rout beyond the hole.

POSTS. The top and bottom are connected by four round posts. These are made out of ¾"-dia. dowel stock. Tenons cut on the ends of the posts fit into the holes in the top and bottom.

I started by cutting the **posts (B)** to length, see drawing above. Since it's important that all four posts end up

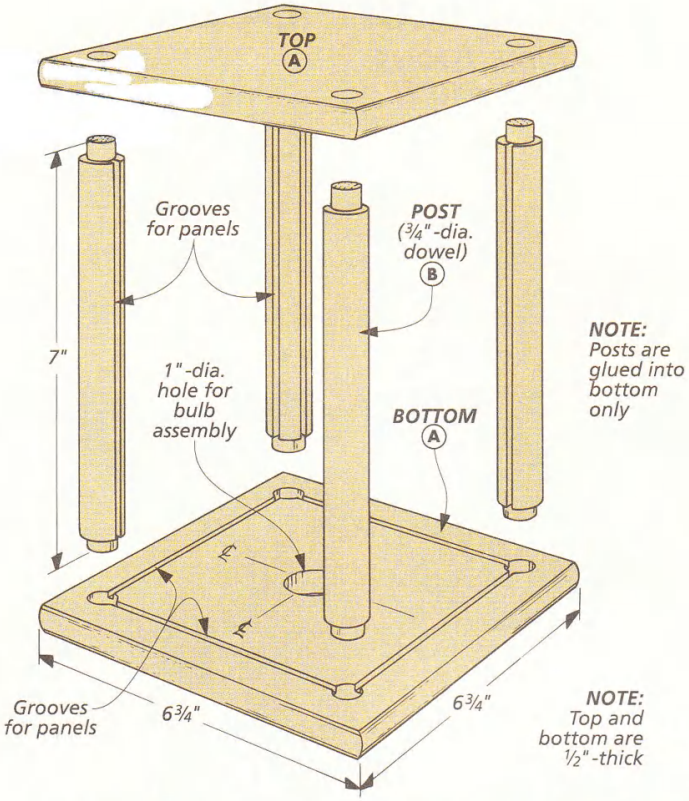

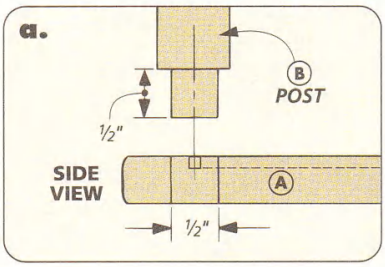

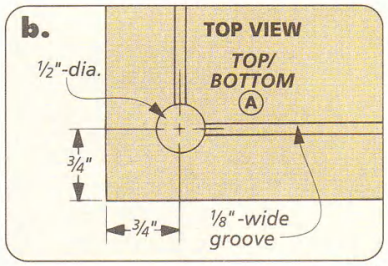

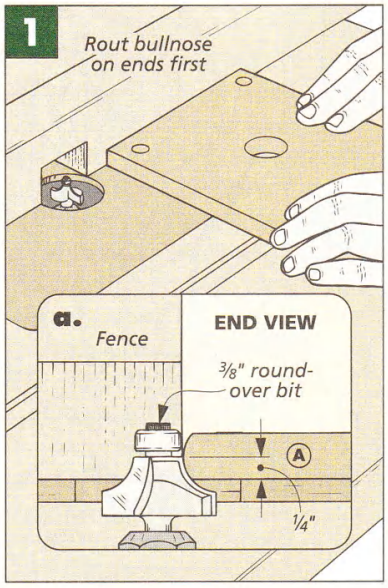

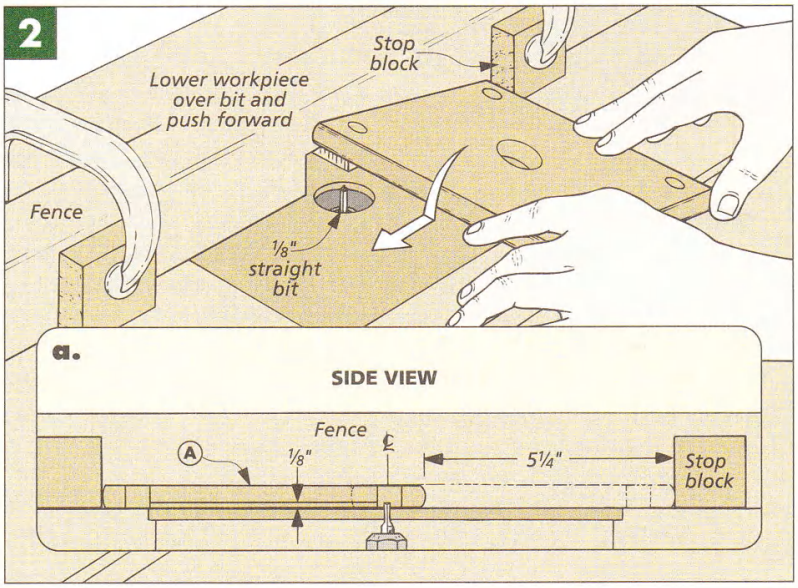

the same length, I used a stop block on my miter gauge.

To cut the ½"-dia. tenons on the ends of the posts, I used a router table and a straight bit, simply rotating the workpiece into the bit to cut the tenon all the way around the dowel, see Figs. 3 and 3a. The trick is to set up the router table fence to establish the shoulder of the tenon and sneak up on the height of the bit until the tenon fits snug in the hole. Shop Note: I attached a zero-clearance insert to my router table fence when cutting the tenons.

GROOVES. With the tenons cut on the ends of the posts, the next step is to cut a couple grooves along the length of each post to hold the side panels, see drawing on opposite page.

I cut these grooves on a table saw, using a saw blade that cuts a standard ⅛"-wide kerf, see Figs. 4 and 4b. To keep the post from rotating as the grooves are cut, I made a couple of square blocks that fit tight over the tenoned ends of each post, see Fig. 4a.

The posts will get glued into the holes in the bottom piece. But to make the top removeable (in order to change the side panels), I had to come up with another method for attaching the top to the posts.

THREADED STUDS. The solution I came up with was to mount a threaded stud in the top end of each post. (I used a machine screw with the head cut off for the stud.) This way, the top can be fastened with four small nuts. (The nuts are epoxied into wood "hub caps" to conceal them, see photo.)

To mount the studs, I drilled a 3/16" hole in the end of each post, using a simple jig to hold the post upright, see Figs. 5 and 5a. (For more on this jig, see page 16.) Then I epoxied the stud into the hole, see Fig. 6.

ASSEMBLY. Once the studs are in place, the posts can be glued into the bottom. When doing this, just make sure that the grooves in the posts line up with the grooves in the bottom. (I used a scrap of plywood as a temporary spacer to align the grooves.)

After the glue is dry, four ⅛" plywood **panels (C)** can be cut to size to fit in the lantern, see drawing at right. Now all that's left is to make the base and the cap.

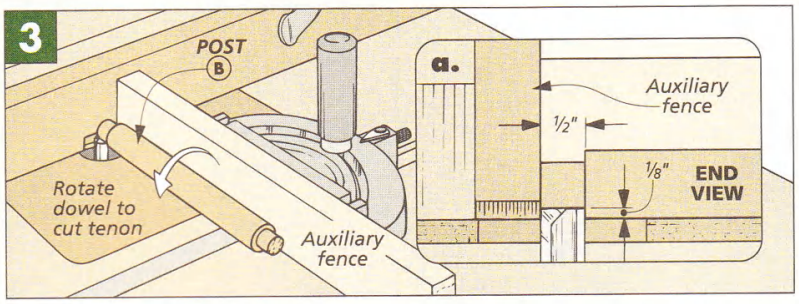

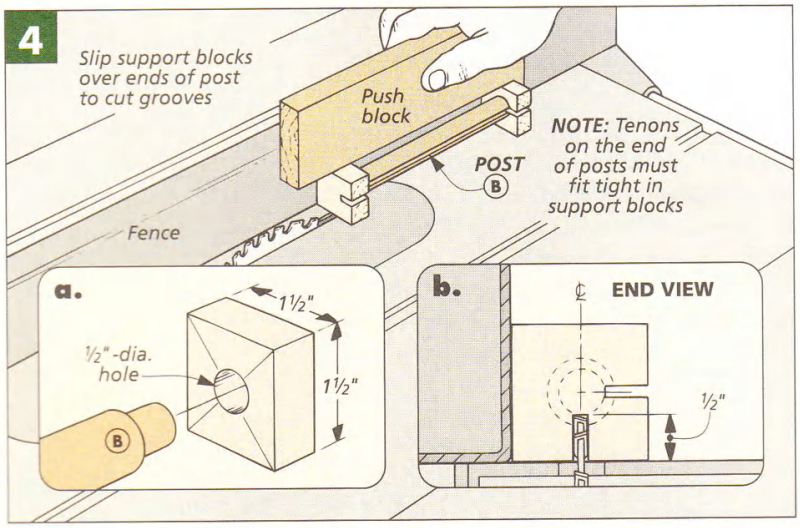

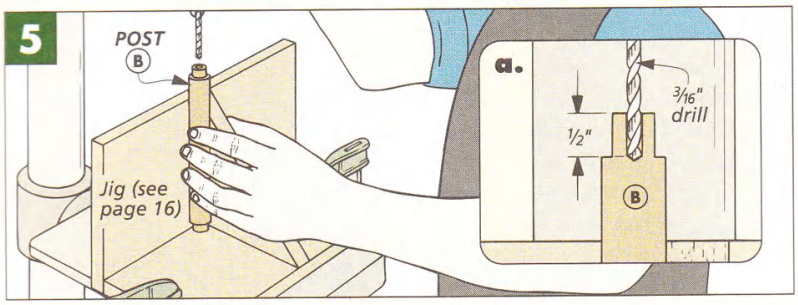

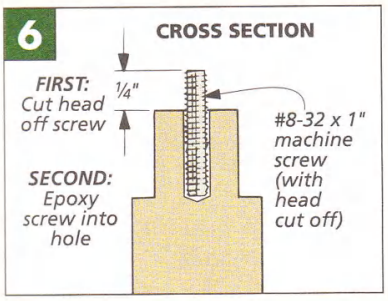

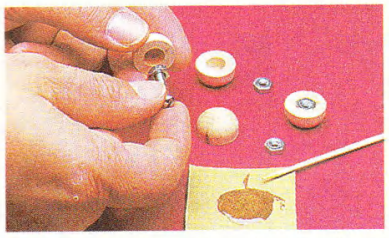

▲ *Thread the nut onto the end of a screw to prevent epoxy from entering the threads while inserting it into the hub cap.*

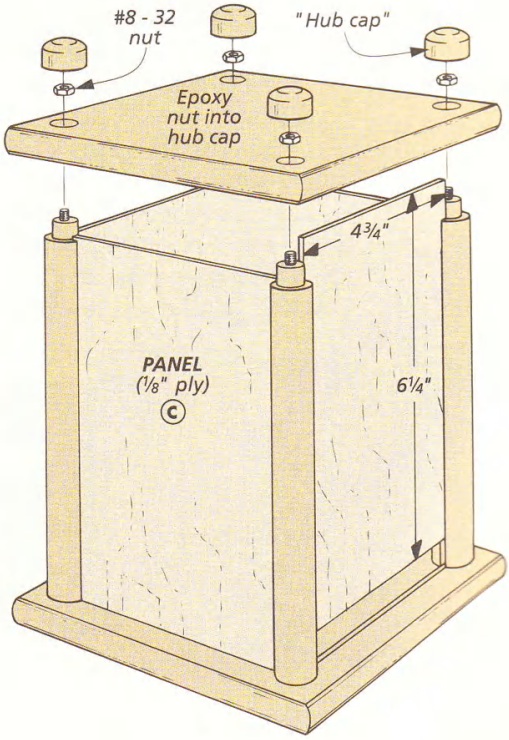

Base & Cap

With the main body of the lantern complete, I began working on the base and the cap that fits on the top.

BASE. The base is nothing more than a mitered frame that's screwed to the bottom of the lantern. To make the four **base sides (D)**, start by ripping a couple of extra long (18") blanks to width (1") and routing a ¼" cove along one edge, see Figs. 7 and 7a.

Next, the pieces can be mitered to length (6⅞"). Before they're glued up however, an arc is laid out along the bottom of each piece. After cutting the arcs out with a band saw, I sanded the edges smooth on the drill press, using a drum sander.

Once the frame is glued up, you can screw it to the bottom of the lantern using four small screws, see detail 'b' at right.

CAP. Now a **cap (E)** can be added to the top of the lantern, see drawing at right. It starts off as a square, 1"-thick blank. Then to create a cove around the edge, I used a ½"-dia. core box bit to rout a channel on all four edges of the blank, see Fig. 8. This channel is centered on the thickness of the piece, see Fig. 8a.

Next, a bevel is ripped on all four edges of the blank to create a peaked "roof," see drawing. To do this safely, I drilled a 3/16"-dia. hole in the center of the blank and screwed it to a carrier board with a roundhead screw, see Figs. 9 and 9a. In addition to securing the blank, the screw also allows you to rotate the blank so you can bevel all four sides.

To complete the cap, I glued a round, hardwood drawer pull to the top of the cap, see detail 'a' above. (I used a dowel pin to strengthen the joint.) Then the cap can be glued to the top. Just make sure to orient the two pieces so the grain is running in the same direction.

Finally, I applied a couple coats of oil finish to the lantern and added the light bulb assembly, see photo in margin. Shop Note: To allow the panels to slide freely, avoid getting any finish in the grooves of the posts. W

▲ *A couple of flexible, metal "wings" hold the bulb assembly in the lantern base.*

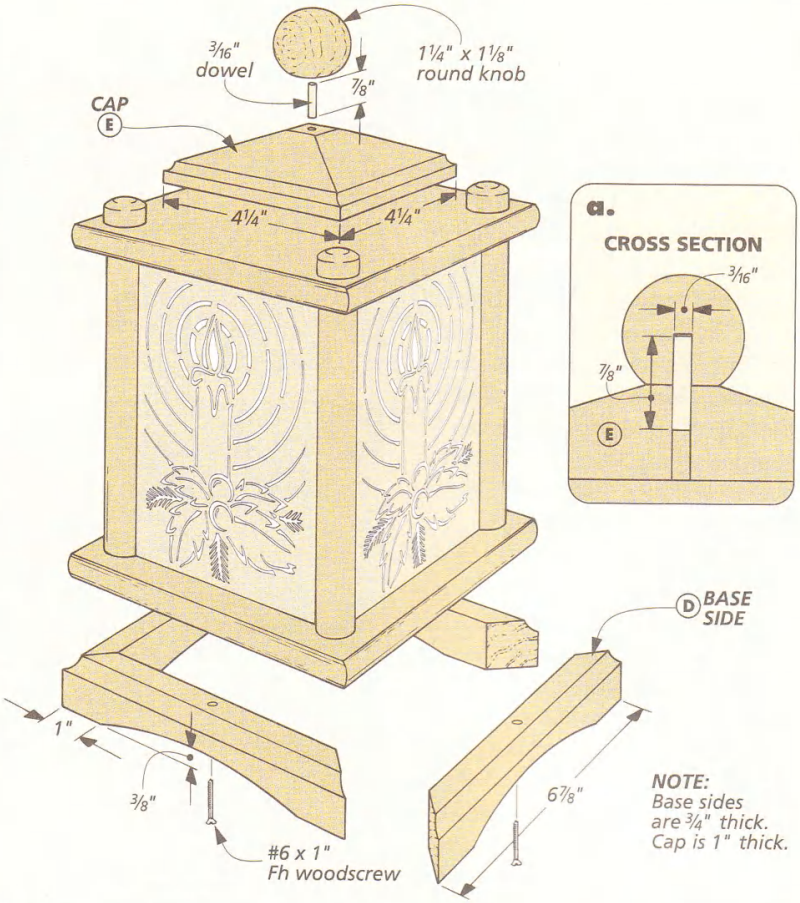

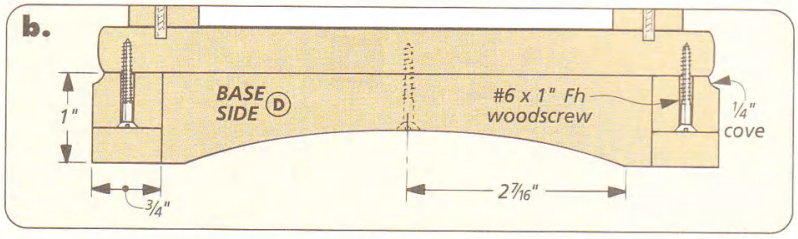

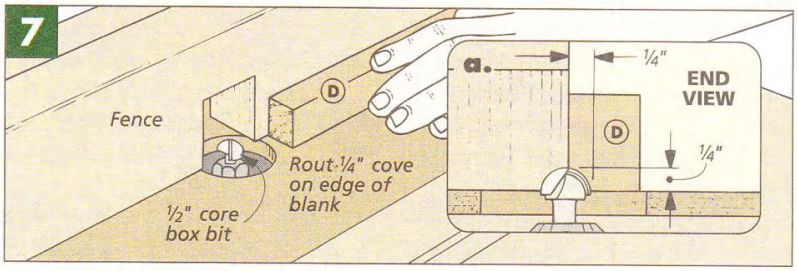

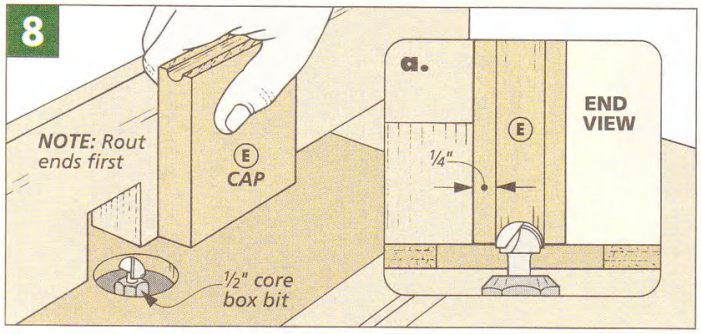

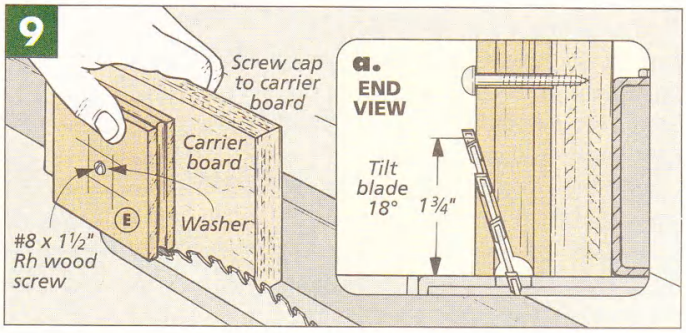

MAKING THE PANELS

It doesn't take years of practice to enjoy scroll sawing. Just a little patience. To make the scroll saw panels for the lantern, the first step is to transfer the pattern to the plywood blanks. A good way to do this is to simply make a photocopy of the pattern and then mount it to your workpiece with spray adhesive, see Step 1. (You'll need to photocopy the patterns at 200%, since they're half-size.)

To cut the inside sections of waste, you'll need to drill small (1/16"-dia.) holes for blade access. Then you can begin to cut away the waste sections, see Step 2. To avoid weakening the plywood panel, cut away the smaller sections first and save the larger ones for last.

If you find that your scroll saw leaves ragged edges in the plywood, you'll need to do a little clean up work. A small file or some sandpaper should remove most of the splinters or "fuzz," see Step 3.

Finally to create a warm, soft glow, I glued a piece of rice paper to the back of each panel, see Step 4. (For sources, see page 35.)

1 *After photocopying the patterns at 200%, use a spray adhesive to affix them to the plywood panels. To save time in cutting, you can carpet tape two panels together.*

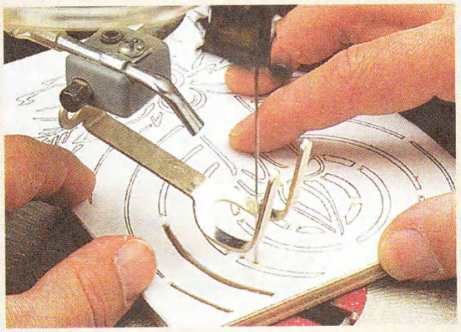

2 *With the pattern in place, drill a 1/16"-dia. starter hole in each waste area. Then cut away the waste, following the pattern lines as smoothly as possible.*

3 *A small file or an emery board can be used to smooth out any rough edges left behind in the panel. This takes a little time, but the end result is well worth it.*

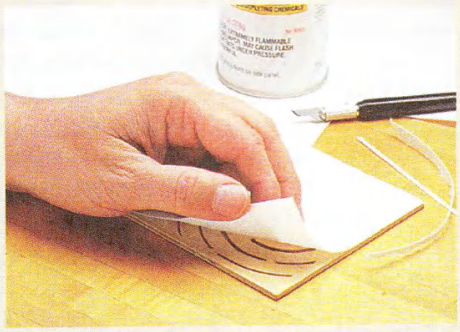

4 *Trim the rice paper to match the size of the panels (or slightly smaller). Then spray the back of the panel with adhesive and press the rice paper in place.*

Additional Patterns (Enlarge 200%)

SNOWY LANE

HOLIDAY ORNAMENTS

TINY TIM'S STOCKING

RIPPING TIPS

Ripping on a table saw is almost second nature — until a piece burns or kicks back. Here's how we safely end up with smooth, clean rip cuts.

Safety Note: *We don't typically show a blade guard on the table saw so the operation can be shown more clearly. But please, use your guard whenever possible.*

Other tools in the shop may compete with the table saw when it comes to making crosscuts or cutting rabbets, grooves and dadoes. But no tool will *rip* boards as quickly, accurately and safely as a table saw.

Of course, ripping is so basic that it's easy for woodworkers to take for granted. But if you've ever ended up with a burned or rough edge or if you've ever had a workpiece suddenly kick back, you know that ripping isn't automatic. Sometimes, though, it's not obvious exactly how to correct the problem.

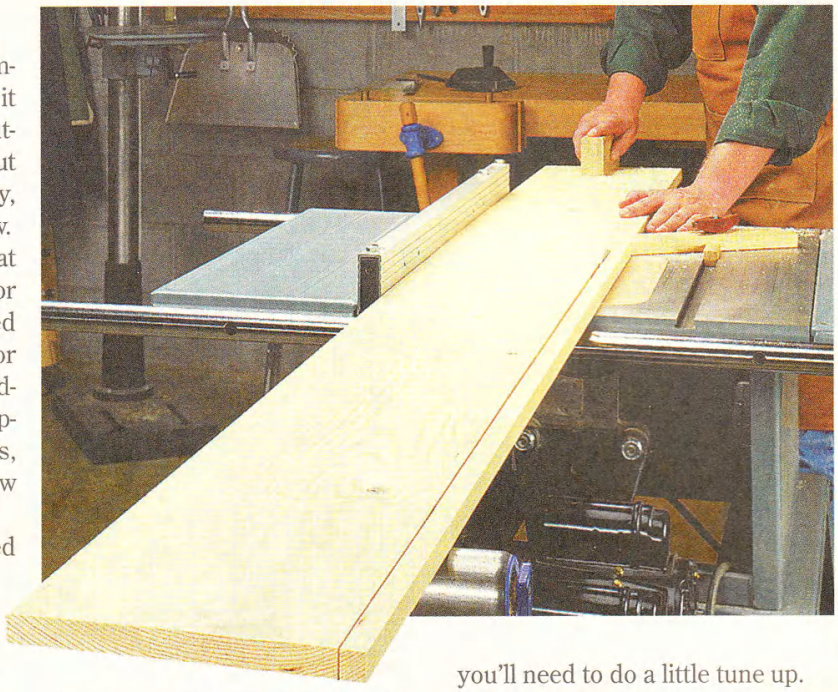

ADJUSTING THE BLADE & FENCE. Burned edges, rough cuts, and kickback are all signals that the fence and blade may not be parallel, see drawing below. The quickest way to check this out is to measure from the saw blade to the fence at the front and back of the blade. (Measure from the same tooth — I mark one with a permanent marker so I can keep track of it.) If the dimensions aren't the same, the blade and fence aren't parallel, and you'll need to do a little tune up.

To align the blade and fence to each other, I actually align them both to the miter gauge slot on the table. This way, the table saw is ready for

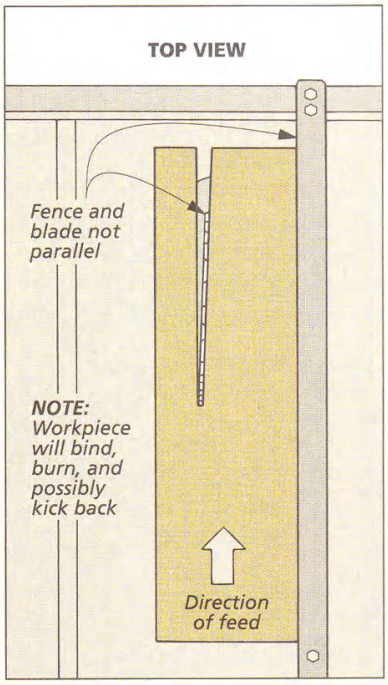

◄ **Check Blade**. *To check the blade to the table, first place a square in the miter gauge slot and set it to touch a tooth. Then rotate the blade and push the square to touch the same tooth. If it's not parallel, the saw trunnion will need to be adjusted, see your table saw's manual.*

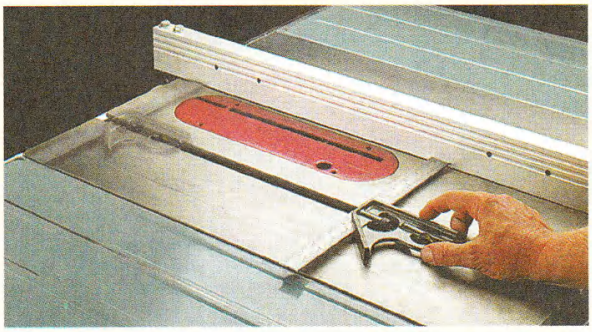

◄ **Check Rip Fence**. *With the blade aligned to the table, adjust the square and slide the rip fence over until they touch. Then lock the fence down and move the square to the back to see if it's parallel to the miter gauge slot. If it's not, check your manual for fence adjustments.*

both rip cuts *and* crosscuts.

To do this, first I use a combination square to check the blade, see the top photo at the bottom of page 24. Then when the blade is aligned, I adjust the fence, using the same technique, see bottom photo. If the blade and fence are both parallel to the miter gauge slot, then they're parallel to each other. And you're ready to begin ripping.

BLADES & BLADE HEIGHT. The setup of the table saw isn't the only thing that can create problems when ripping. If your blade is dull or has a lot of pitch build up, you'll probably also end up with burned and excessively rough edges.

Speaking of saw blades, I often get asked if a combination blade is good enough or if a rip blade is better. Frankly, I'd say a combination blade works good enough, see drawing at right. In fact, it will probably cut a smoother edge than a rip blade. What it won't do is rip the pieces quite as quickly as a rip blade. (But you'd probably only be able to notice this when ripping through thicker stock.)

And as for how high to set the saw blade, I simply make sure the bottom of the *teeth* clear the top face of the workpiece, see Fig. 1a. If the teeth are lower, they'll be in contact with the wood longer, and there will be more friction created and more chance of burning the edges.

BASIC TECHNIQUE. When it comes to technique, there are only a few "rules" to keep in mind, see Fig. 1. Follow them, and you'll greatly reduce your chance of kickback and burnt and rough edges.

First, feed the workpiece at a steady rate. If you go too fast, the saw can bog down. Too slow, and you may burn the edge. And if you stop during the cut, you can bet you'll end up with bad saw marks, burning, or both.

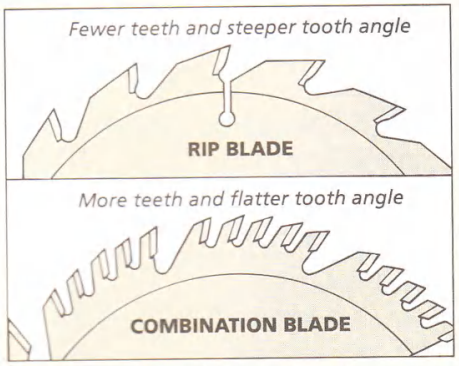

▲ *A rip blade has fewer teeth and a steeper tooth angle so it will remove wood faster. With more teeth, the combination blade cuts a little smoother and slower.*

Second, always make sure you follow through with the workpiece — don't let go of the stock until it's *completely* past the blade.

Because you want to work steadily and smoothly, it's important to plan your cut *before* you turn on the saw. Will you need a push block? A featherboard? Is the piece long enough to require an outfeed support? These and other accessories will help keep the cut safe and smooth, see the box on page 26.

Finally, when ripping, *don't* stand directly behind the blade. This way, if the stock does bind and kick back, you won't be in the path of the workpiece, and you'll be less likely to get injured.

When pushing the stock past the blade, you also want to keep pressure towards the fence. One common mistake when using a push block is to run it against the fence. This can allow the piece to drift away from the fence and against the blade. So I always center the push block on the width of the piece, see Fig. 1b.

WOOD MOVEMENT. There's one more way you can end up with rough or burned edges and kickback. That's if the wood tries to "close" the kerf, pinching the back of the saw blade. (The wood may have built-in "tension" that gets released as it's cut.) Here again, I use an accessory — a table saw insert with a splitter — to prevent this, see the box on page 26.

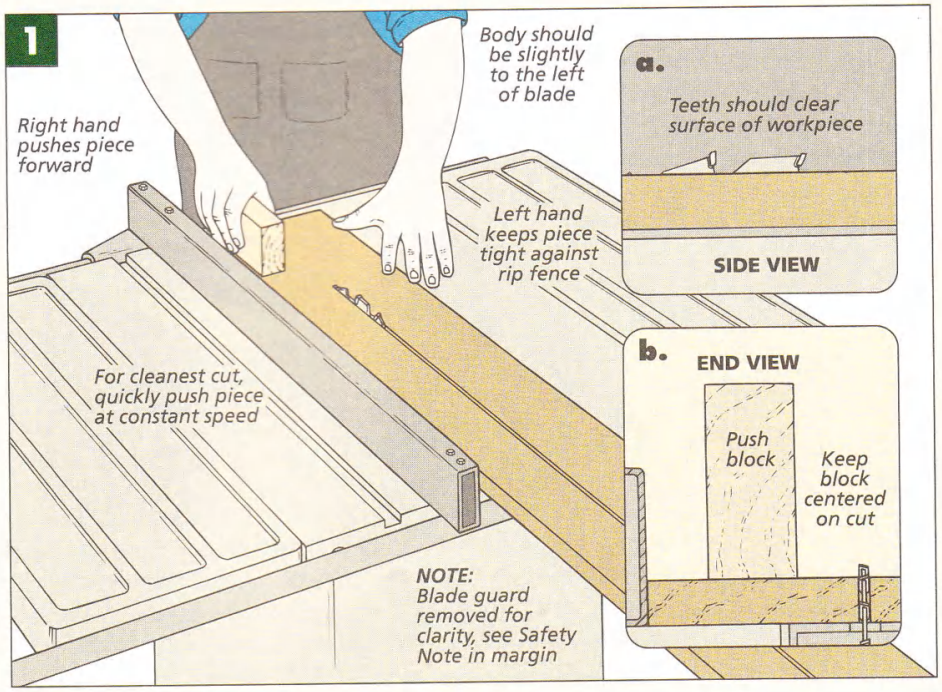

CUPPED BOARDS

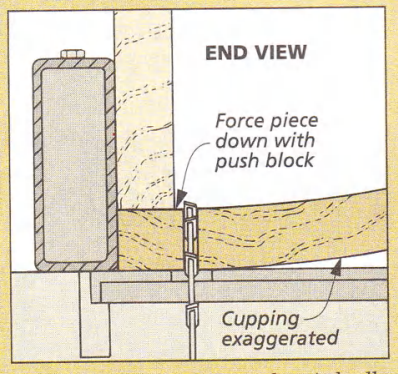

Ripping Cupped Boards. *A badly cupped board should be ripped on a band saw. But a slightly cupped piece can be ripped on the table saw. I like to hold the board firmly against the table so the piece falls away from the blade.*

Ripping Sheet Goods

Moving a piece of plywood around the shop is awkward. Pushing it across a table saw can be downright scary. And I don't attempt it unless I have an assistant and a good outfeed support, see drawing below.

But even a helper can get in the way — if they try to do too much. When I'm pushing a large sheet across the saw, I don't want help moving the plywood. I simply want someone to "guide" and support the cutoff as it's pushed off the table.

This means that when it comes to directing the cut, the person pushing the plywood is in control. And the key is to be ready to move your body — to be light on your feet. (This is also true with really long workpieces as well.) Instead of standing directly behind the saw for the entire cut, the operator starts at the corner opposite the rip fence, pushing both towards the fence and forward into the blade. Move across the front of the saw as you push the sheet forward in a smooth continuous manner. When you reach the table, you should be just to the left of the blade (the normal ripping position).

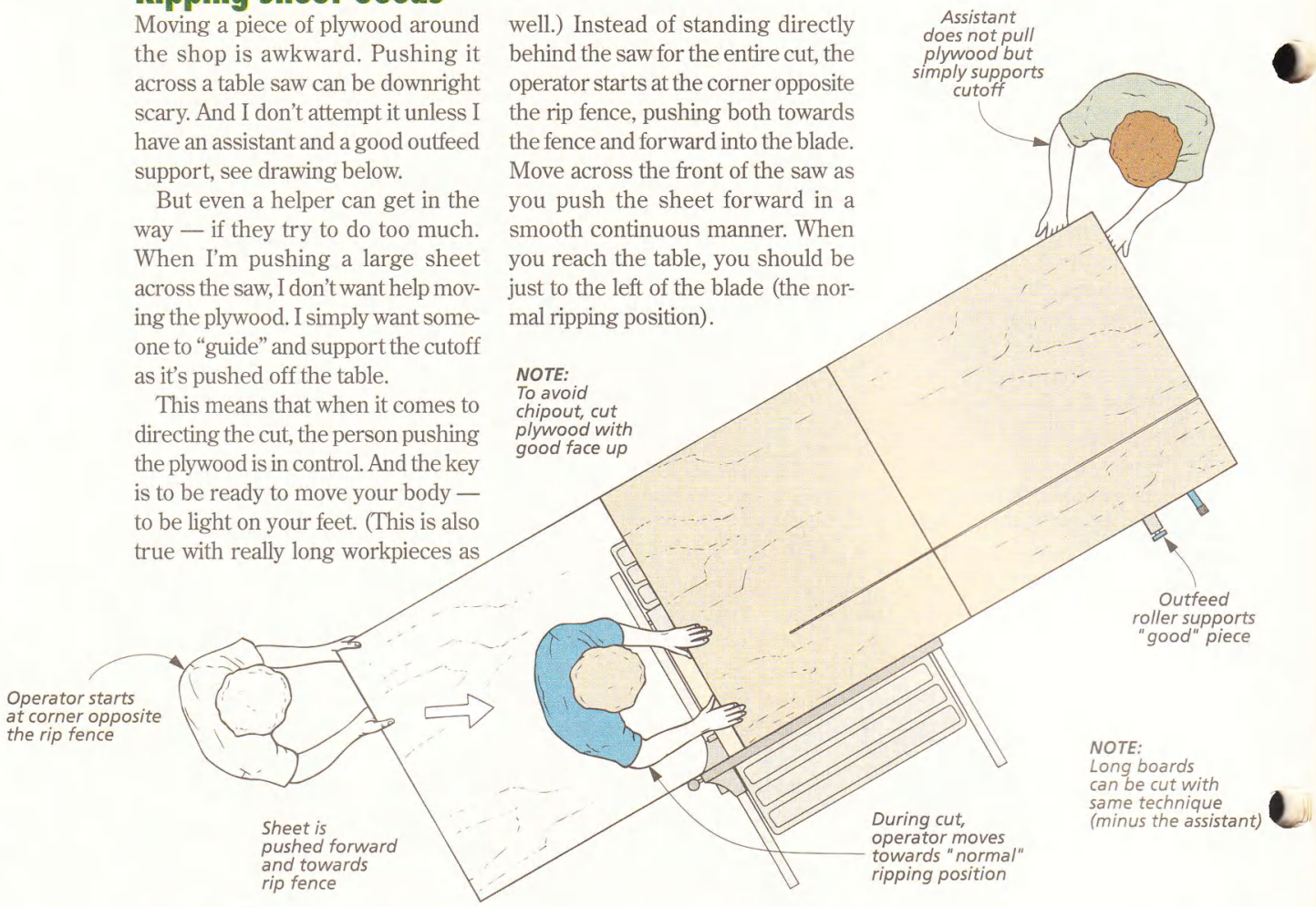

RIPPING ACCESSORIES

There are quite a number of table saw accessories you can use to make ripping safer and more accurate. Some act as a "third" hand. Others provide a good buffer between the blade and your hand. All of them provide you with more *control* as you rip on the table saw.

When should you take the time to set up an accessory? Unfortunately, there aren't any hard and fast rules since there are always a number of factors to consider: the width of the cut, the board you're working with, and the number of cuts you need to make. But one thing is for sure. Any time you're uncomfortable with a setup, you should find some way to make it safer.

Whether you make your own or purchase them from a woodworking store or catalog, the ripping accessories shown below go a long way toward making your shop a safer place.

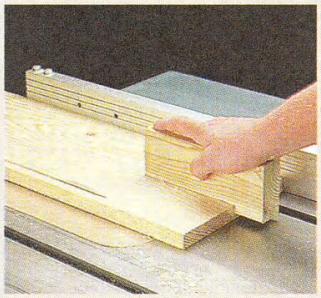

***Push Block**. A scrap push block with a "heel" or lip on the back will push the workpiece safely past the blade.*

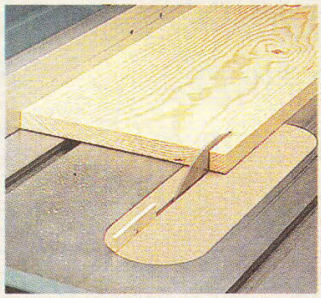

***Insert with Splitter**. Adding a zero-clearance insert with a splitter will help prevent the kerf from closing on the blade.*

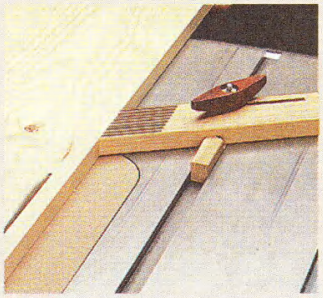

***Featherboard**. A featherboard will press the workpiece tight against the rip fence so you get a more consistent, smooth cut.*

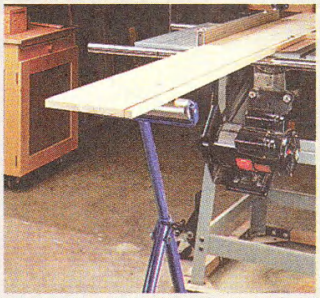

***Outfeed Roller**. An outfeed roller will support a long board so you don't have to hold it down as you push it forward.*

Crooked Stock

If you have a piece with a slight crook, you can create a straight edge by making a number of passes over the jointer (if you have one). Or you can do the same thing in one pass by using a simple sled. First, nail the board to the sled so one entire edge is hanging over the sled. Then rip the edge with the sled riding against the rip fence. (This technique also works for rough stock with no straight edges.)

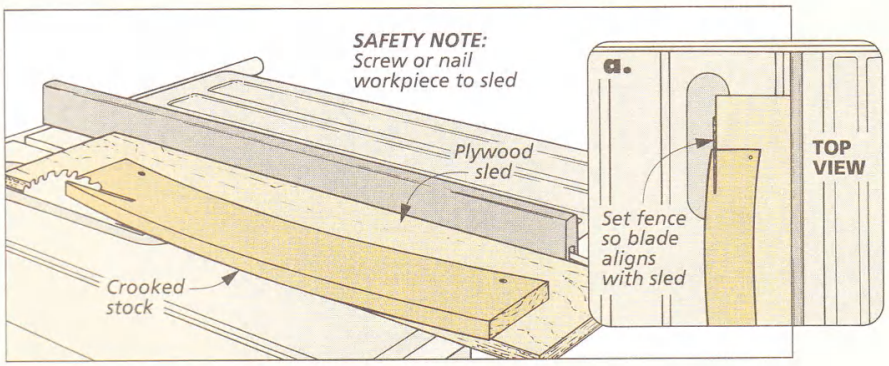

Ripping Thin Strips

Creating thin strips on the table saw can be a little nerve-racking. Ripping through a piece with the fence so close to the saw blade is a "good" opportunity for kickback. So whenever I need just a single thin strip, I like to set the fence so the strip falls to the *waste* side of the blade.

But when I need a lot of thin strips, resetting the fence each time just isn't practical — or accurate. So I end up cutting the strips between the fence and the blade. But I take a couple precautions to make it more safe.

First, I use a zero-clearance table saw insert with a splitter (see box on opposite page). This prevents the wood from pinching the back of the blade and kicking back.

Plus, I use a simple auxiliary fence with a matching push block that rides "piggyback," see drawing. The nice thing about this setup is that since the push block rides *over* the auxiliary fence, my hand isn't over the blade.

The key is that the push block and fence are cut from the same piece so they're the same width. The workpiece is moved through the blade by a small "heel" glued to the edge of the block near the back. And I added a handle to make the block easy to push. (For more on making and using this auxiliary fence and push block, see *Woodsmith* No. 119.)

To position the auxiliary fence, I first set the rip fence so the distance between the blade and auxiliary fence will match the thickness of the strips I want, see detail 'a' at left. Then, I carpet tape the auxiliary fence face down to the table to keep it from sliding.

To rip the strips, start by feeding the stock by hand. Then near the end of the cut, set the push block in place and push the piece past the blade.

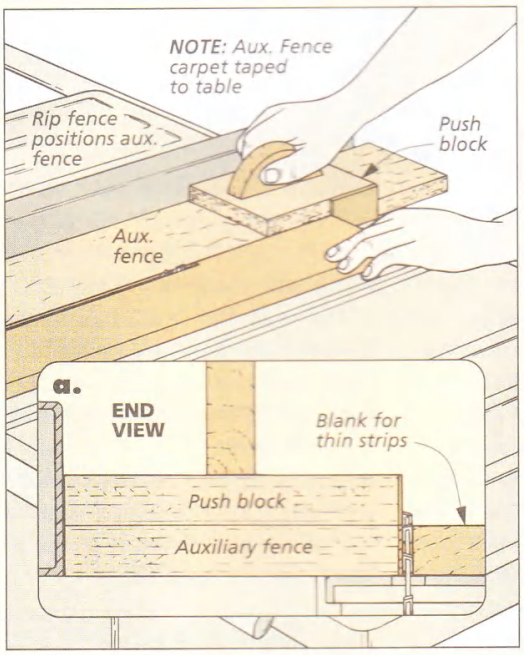

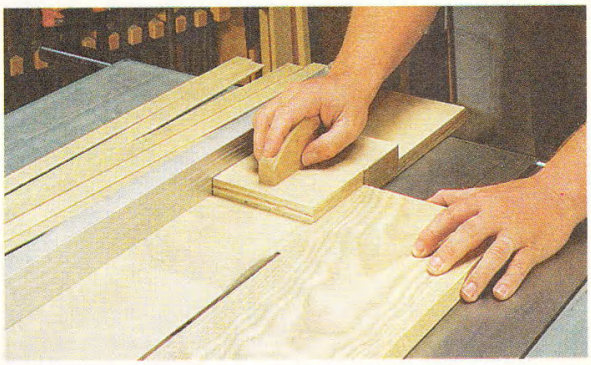

▲ *This short, wide auxiliary fence and stop block combination keeps your hands away from blade while ripping thin strips from both long and short blanks.*

Ripping Glue Joints

If you want to glue up panels but haven't got a jointer for squaring the edges, you can rip mating edges of the boards at the same time, see drawing. Ripping the two edges together ensures that both edges will match up perfectly, see detail 'a'.

To do this, first rough cut the pieces to within ⅛" of final width. Place them edge-to-edge and tack them together with a couple cleats. Then all that's left is to rip right through the joint. W

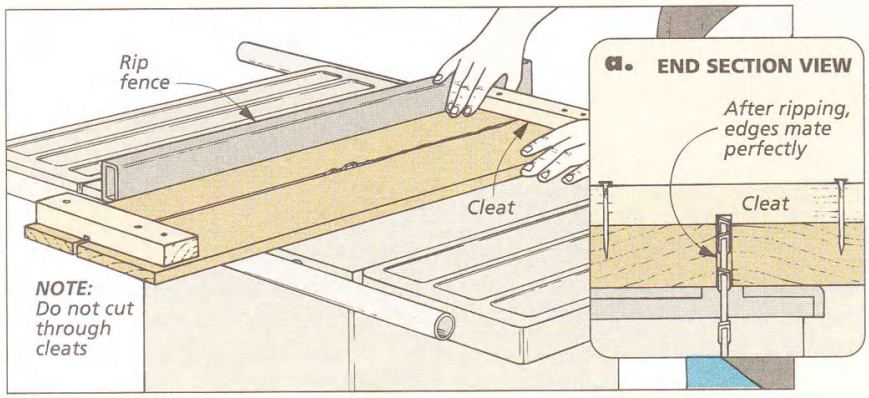

WEEKEND PROJECT

FOLDING DESK CLOCK

Figured veneer, solid brass hardware, and room for a photograph make this desk clock an attractive display piece for the home or office.

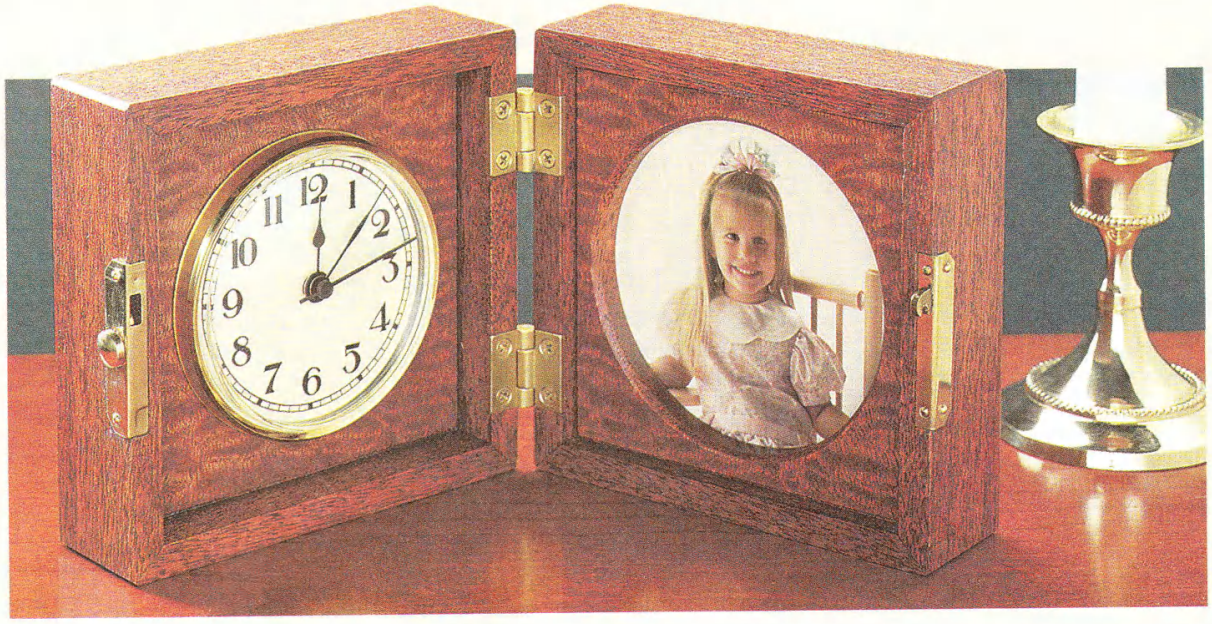

I must walk through the *Woodsmith* offices a hundred times a week. But a couple months ago, I noticed something that had never struck me before. Just about everyone here has a photograph sitting on his or her desk.

Some people have a photo of their spouse or kids; others have pictures of their pets. There's even one or two people who have a picture of their vehicle. That got me to thinking how a desk-top picture frame might make a good project for *Woodsmith*. So I got the staff together to discuss a design.

CHANGES. By the time we finished, the project had expanded to a photo frame combined with a desk clock, see left photo below. But that's what the design process is all about—coming up with new ideas.

While some people will want to keep the clock on their desk, we added hinges and a catch so it can be taken along on a trip, see right photo below.

And in order to give you more design possibilities, we've included a separate article on using figured veneers and inlay strips to "dress up" your clock, see page 32.

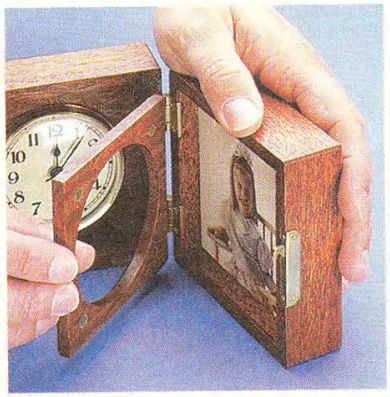

▲ *Rare earth magnets epoxied into a wood frame are used to hold the photograph in place.*

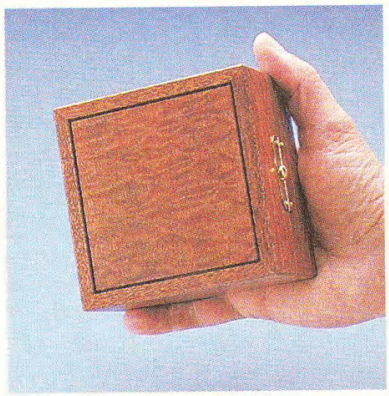

▲ *Rabbets cut around the veneered panels of the clock create distinctive shadow lines.*

MATERIALS

A	Panels (2)	¾ MDF - 3⅝ x 3⅝
B	Edging (8)	5/16 x 1¼ - 4¼
C	Photo Frame (1)	¼ x 3⅝ - 3⅝

SUPPLIES

- (2) ¾" x 13/16" Brass Butt Hinges w/Screws
- (4) ¼"-dia. Rare Earth Magnets
- (4) #8 x ½" Fh Sheet Metal Screws
- (1) Brass Spring Catch w/Escutcheon Pins
- (1) Veneer (appr. 1.25 Sq. Ft.)
- (1) 2¾"-dia. Fit-up Clock Movement
- (1) Acetate Sheet

Panels

The clock is made up of two halves that are hinged to open and close like a book. Each half consists of a veneered MDF panel with a solid wood frame around the edges. One of the panels, the one that will hold the clock, is veneered on both sides. The other panel is veneered on only one side since it will be covered by a photo and a frame, see drawing at right.

To make the two halves, I started with the veneered **panels (A)**. If you've never done any veneering, don't worry. The small size of these pieces makes the process pretty simple. To help you out, we've included a technique article. (It immediately follows this article on page 32.)

Instead of cutting the MDF panels to size and then veneering them, I started with oversize panels. This way, I could trim the panels to the exact size after they were veneered. So I began by cutting two oversize blanks out of ¾" MDF. (I made mine 5" x 5".) Then I cut three pieces of veneer approximately 4" x 4" square.

When veneering the clock panel, make sure that the grain of the veneer runs in the same direction on both sides of the panel. Then once the glue is dry, the panels can be cut to final size (3⅝" x 3⅝"), see Fig. 1.

SHADOW LINES. To set the panels apart from the edging that is added later, I decided to create a shadow line. Shop Note: Instead of a shadow line, you can add an inlay strip, see page 33.

To create the shadow lines, I routed a 1/16" x 1/16" rabbet around the veneered edges of each panel, see details 'a' and 'b' above. This exposes the MDF on the bottom of the rabbet, but you won't notice it once the edging is added and the clock is stained.

CLOCK HOLE. The quartz clock movement simply press fits into a 2⅜"-dia. flat-bottomed hole in the center of the clock panel. In order to avoid having to purchase a special bit to make this hole, I tried an alternate method.

Using a sharp wing cutter, I cut the outer edge of the hole first, see Figs. 2 and 2a. (To prevent the drill bit of the cutter from drilling through the panel, make sure it's flush with the end of the cutter bit.)

Then with a router and a ½" straight bit, I nibbled away the waste in the center of the hole, see Fig. 3. This can be done with a hand-held router, but don't try to rout the waste away in one pass. Instead, remove the waste in stages, lowering the bit ¼" or so each time, see Fig. 3a.

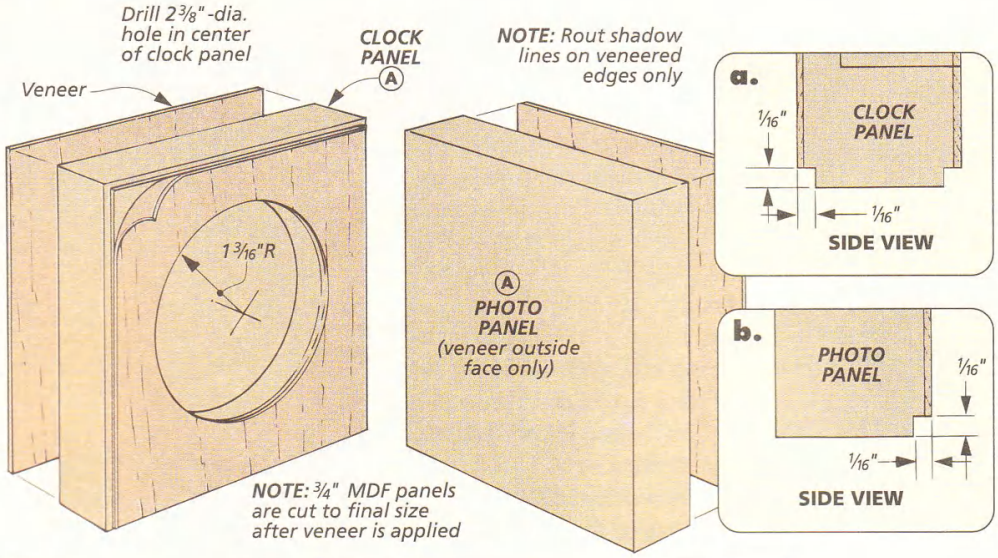

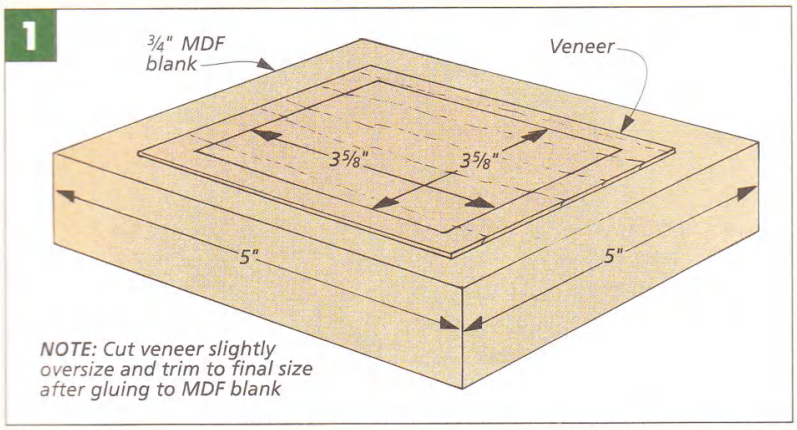

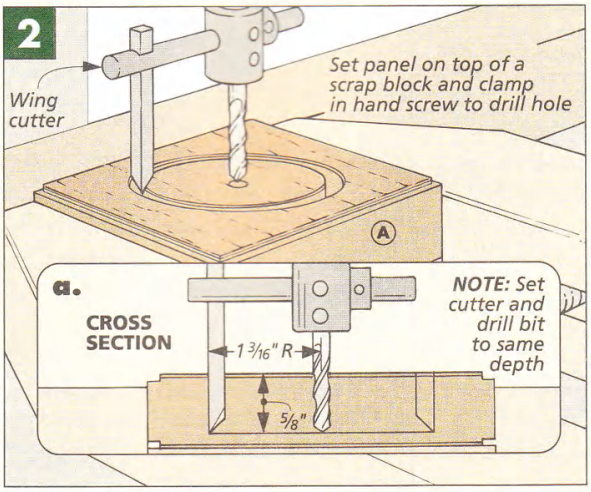

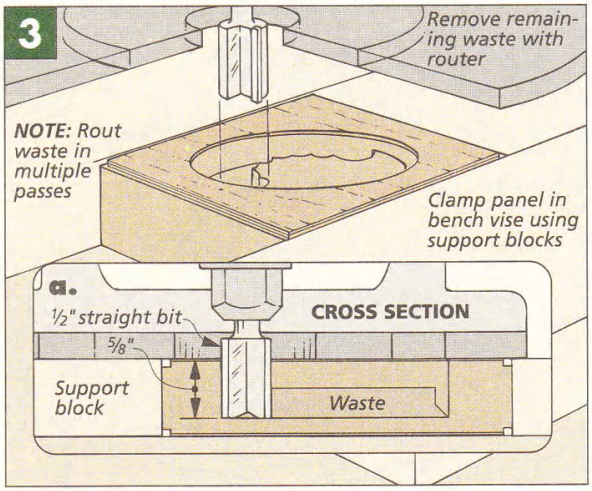

Edging & Frame

Both the clock panel and the photo panel are framed with hardwood edging, see drawing at right. This edging is wider than the thickness of the panels in order to create a recess inside for the clock movement and the photograph frame.

EDGING. I used two blanks to make the **edging (B)**, each one about 20" long. First, I ripped the blanks to a width of 1¼". Then I re-sawed each blank so it ended up 5/16" thick.

With the width and thickness of the blanks correctly sized, I mitered the individual edging pieces to fit around the two panels.

The edging is glued flush with the *outside* face of each panel. To do this, I found it easiest to place the panels and edging on a smooth, flat surface while gluing and clamping the pieces together, see Fig. 4. (I used the cast iron top of my table saw.)

With the glue dry and the two halves essentially complete, the next step is to relieve some of the sharp edges. I started by routing a small chamfer across each mitered corner of the edging. Then I chamfered the outside edges of each half of the clock, see Figs. 5 and 5a.

HARDWARE. Since I had selected a fancy veneer to use on this project, I wanted to pick some nice hardware to match. A couple of solid brass hinges connect the two halves of the clock. And a spring-loaded brass catch holds them closed.

Attaching this hardware is pretty straightforward. The first thing to do is rout the shallow hinge mortises on each half, see Figs. 6 and 6a.

Once the hinges are installed, the next step is to add the catch. The catch I used is a two-piece affair designed to be surface mounted with small escutcheon pins. However, you'll still need to cut a mortise for the mechanism of the catch. And in order for the two halves of the clock to close tightly, you'll need to mortise the inside face of the catch and strike plate flush with the edging of the clock, see Fig. 7. (For more on mortising the catch, see page 17.)

PHOTO FRAME. When it came to making the frame for the photo half of the clock, I was looking for a way to hold the photograph securely, but still allow it to be changed easily, see drawing at top of opposite page. The solution I came up with was a simple one — magnets. Four small magnets are used to hold both the frame and the photo in place. But more on this later.

VENEER. The **photo frame (C)** starts off as a slightly oversize blank made from ¼"-thick stock. And since I wanted the frame to match the panels of the clock, I glued the same figured veneer to *both* sides of the frame

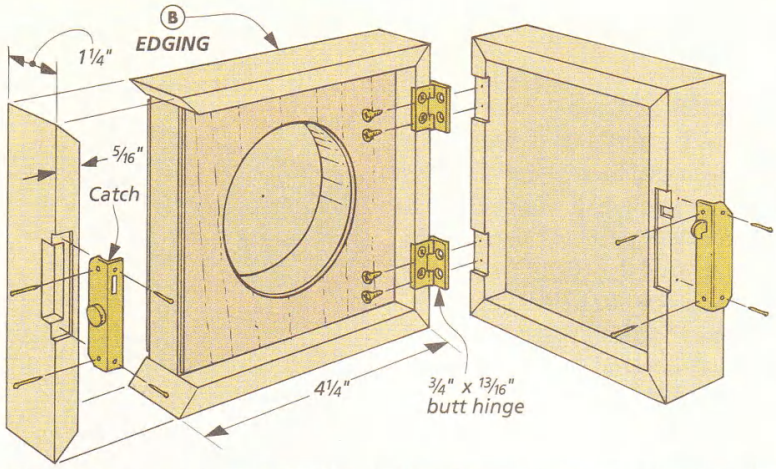

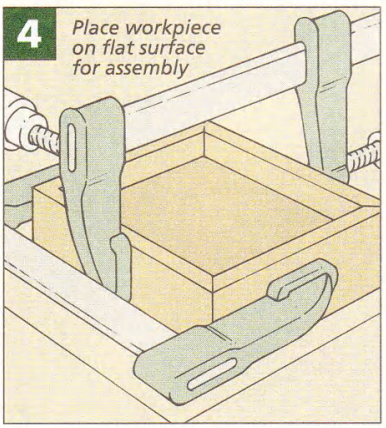

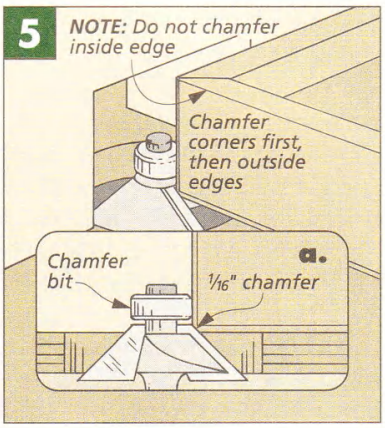

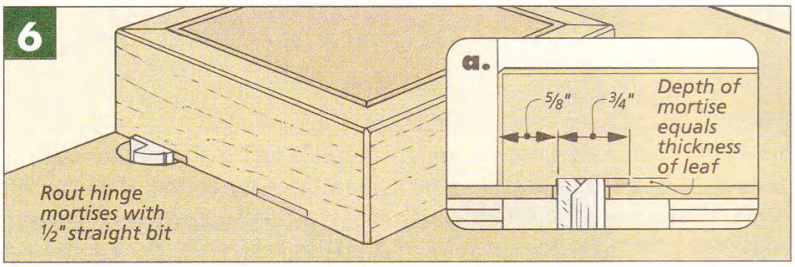

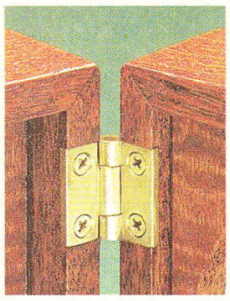

▲ *Heavy, solid brass hinges join the two halves of the clock.*

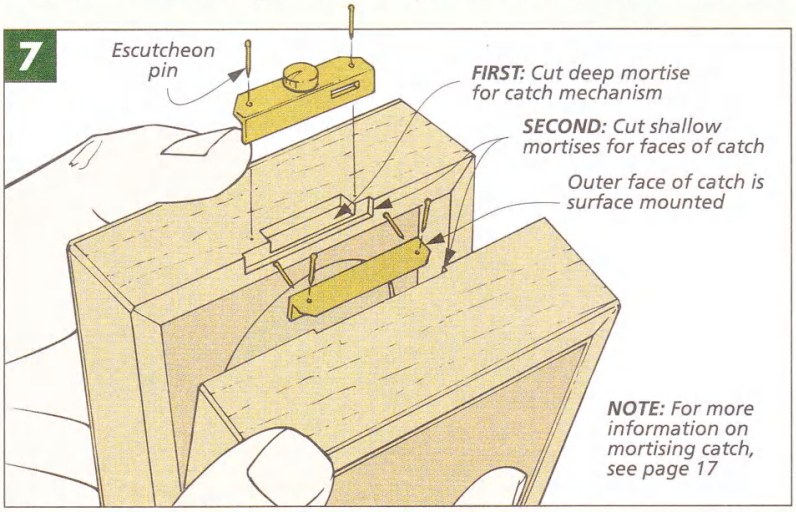

blank. (Veneering both sides helps prevent the thin stock from cupping.)

Once the blank is veneered, you can cut the frame to size. It should fit into the recessed opening of the clock with enough clearance so it can be easily removed to change the photo.

DRILL HOLE. The photo frame has a large hole in the center to reveal a photograph. The edge of this hole is chamfered to match the rest of the clock. I wasn't too concerned about drilling the hole, but I was a little nervous about routing the chamfer inside the hole on a piece this thin and small.

The solution I came up with was to use double-sided tape to attach the frame to a larger blank made out of ¾"-thick MDF. Using a wing cutter again, I made a hole in the center of the frame, drilling all the way through both the workpiece and the MDF blank, see Figs. 8 and 8a.

Next, with the frame still attached to the MDF, I chamfered the edge of the photo opening, see Figs. 9 and 9a. (This is the side of the photo frame that will face *out*.) Then I carefully removed the frame from the MDF.

SHADOW LINES. To complete the frame, I routed rabbets on the outer edges to create shadow lines identical to the ones on the panels of the clock, see detail 'a' above.

MAGNETS. The photo frame is held in place with four small rare earth magnets. These magnets are simply epoxied into holes drilled in the back of the photo frame, see Figs. 10 and 10a. Then four small sheet metal screws are installed in the photo panel of the clock to give the magnets something to grab onto, see detail 'a' above.

FINISHING. When it came time to finish this project, I decided to give it a coat of stain for a couple reasons. One, I wanted to even out the color of the solid wood edging and the veneered panels. And two, the stain helps to darken and conceal the exposed MDF edges of the shadow lines.

After applying the stain, I wiped on three coats of an oil finish. Then once the finish is dry, you can add the clock movement and figure out which photograph to put in the frame. To help protect the photo from dust and fingerprints, I cut a piece of clear acetate to place between the frame and the photograph, see photo below. W

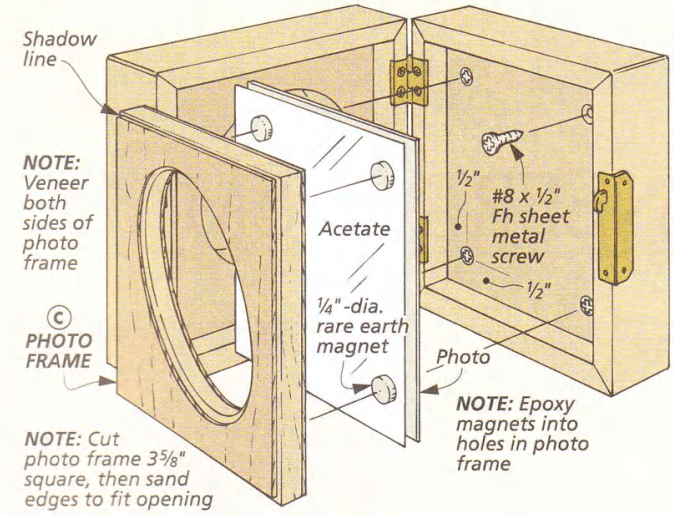

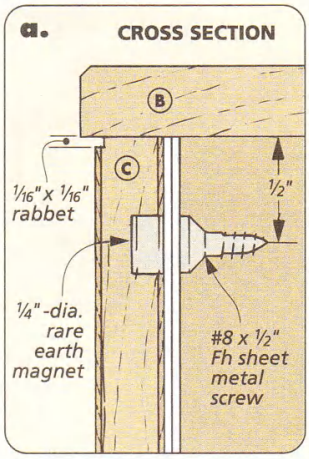

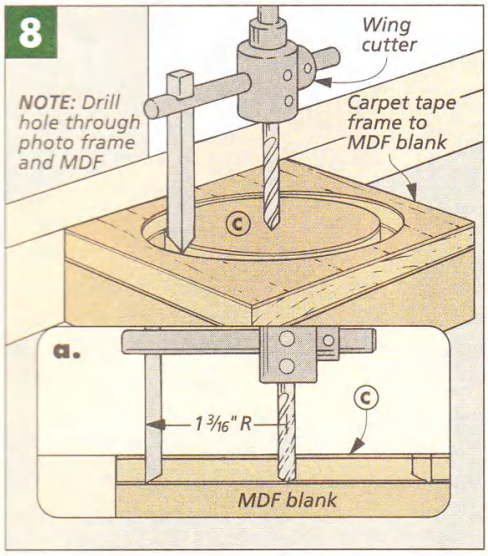

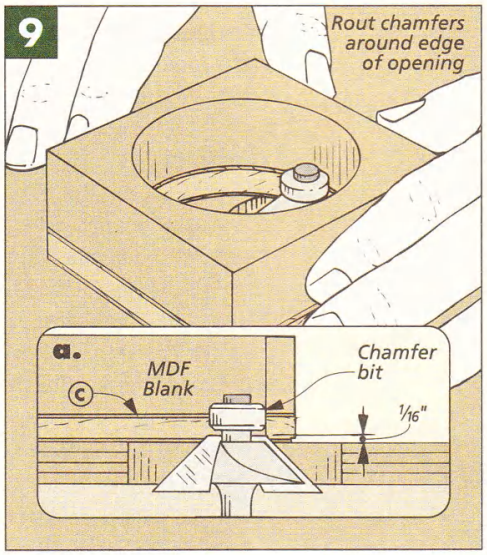

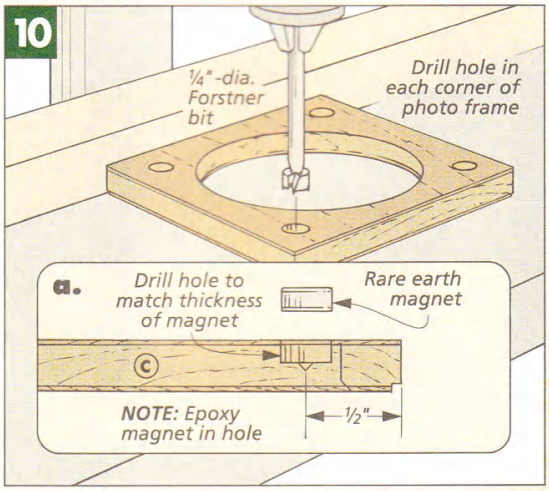

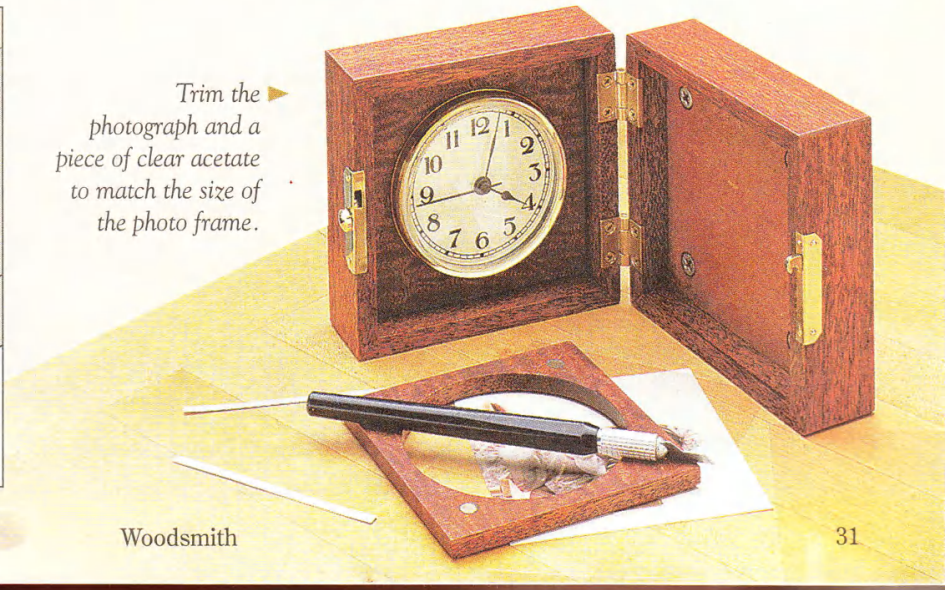

Trim the photograph and a piece of clear acetate to match the size of the photo frame.

VENEERING SMALL PROJECTS

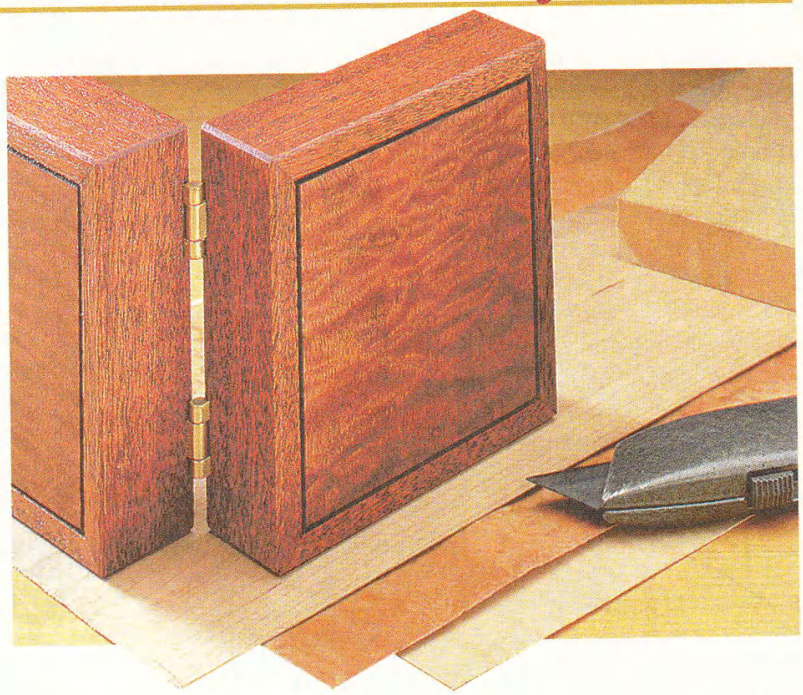

When I began making the desk clock shown on page 28, I decided to use veneer for a couple of reasons. For one, it allowed me to make the panels out of MDF, which is much more stable than solid wood. But as an added benefit, using veneer gives you a wide range of options when it comes to the look of the clock, see photos below. (And for even more variety, you might want to consider adding an inlay strip, see box on opposite page.)

Veneer is nothing more than very thin slices of wood (often only 1/40" thick). But when glued down to a substrate (in this case, the MDF) it's difficult to tell it apart from solid wood.

Although you can buy peel-and-stick veneer that has an adhesive backing, for this project I chose traditional veneer which is glued down with ordinary woodworking glue or contact adhesives. This type of veneer is readily available in dozens of wood species as well as some beautiful, highly-figured varieties, see page 35 for sources.

VENEERING

If you've never done any veneering before, this clock is a good project to start with since it's small and you don't have to worry about matching or piecing sheets of veneer together. Essentially, there are three steps: cutting the veneer, gluing it down, and clamping it in place.

CUTTING. Because veneer is so thin, it splits easily. This can make cutting it a bit of a challenge. Even with a sharp blade, it's possible to tear the grain, especially when cutting across the grain. To avoid this problem when making the clock, I decided to veneer an oversize panel. Then when the glue is dry, you can cut the veneered panel to size without any trouble.

For the clock, I started with an MDF panel about 5" square. Then I cut my veneer pieces slightly smaller (about 4" square). Since the panel will be trimmed to final size, the veneer doesn't have to be cut perfectly square, just close.

If you are cutting the veneer for the clock from a larger sheet, pay attention to the grain and figure pattern. You'll want to select the nicest areas of the veneer to use, but you also want to make sure that the color and grain direction matches for each piece on both panels of the clock.

To get a better sense of what the veneer will look like when it is finished, try wiping it down with mineral spirits. Then simply move your

Veneering Options

Veneers can be a great way to experiment with rare or highly-figured woods that are too expensive or hard to find as solid wood.

But even if with commonly available species, you can create a totally different look for the clock by combining a veneer with a contrasting wood for the edging, see left photo. Or, try using a figured veneer with a plain edging, see right photo.

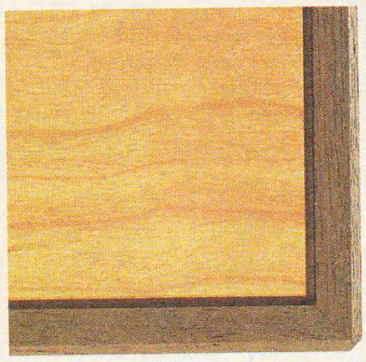

▲ *Cherry veneer, walnut edging.*

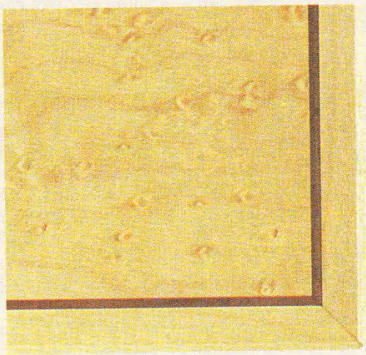

▲ *Bird's-eye maple veneer, maple edging.*

MDF block around on the veneer and mark off the sections you want to use.

GLUING. With the veneer cut to rough size, it can be glued to the MDF. You have several choices when it comes to selecting an adhesive. Traditionally, furniture makers have used hide glue for veneering. Today, contact cement has become popular. But I didn't want to mess around with either one of these for such a small project. So instead, I decided to use ordinary yellow glue.

No matter what kind of glue you use, there's one thing to watch out for. Because veneer is so thin, it's easy for the glue to actually bleed through the surface of the veneer, especially with porous veneers (like mahogany). This can create a problem when it comes time to stain or finish the project.

To minimize this problem I try not to use an excessive amount of glue. This way, if any glue does ooze through the veneer, it can usually be scraped off with a cabinet scraper. Shop Note: Before finishing the clock, you might want to wipe it down with mineral spirits to make sure that you've removed all the glue stains.

CLAMPING. When clamping up veneers, the goal is to apply even pressure across the entire surface. With large projects, this can be quite a challenge; one that may require specialized clamps and presses. But fortunately, it's not difficult at all with the desk clock. To even out the clamping pressure, I simply sandwiched the blank between two scraps of MDF, see Fig. 1.

In order to prevent the workpiece from sticking to the scraps, I placed a couple of pieces of wax paper in between, see Fig. 1. Then I used C-clamps to hold the "sandwich" together. After the glue is dry, the panels can be squared up and cut to final size, see Fig. 2.

One final note on finishing. Keep any final sanding to a minimum. It's real easy to sand right through the thin veneer layer. W

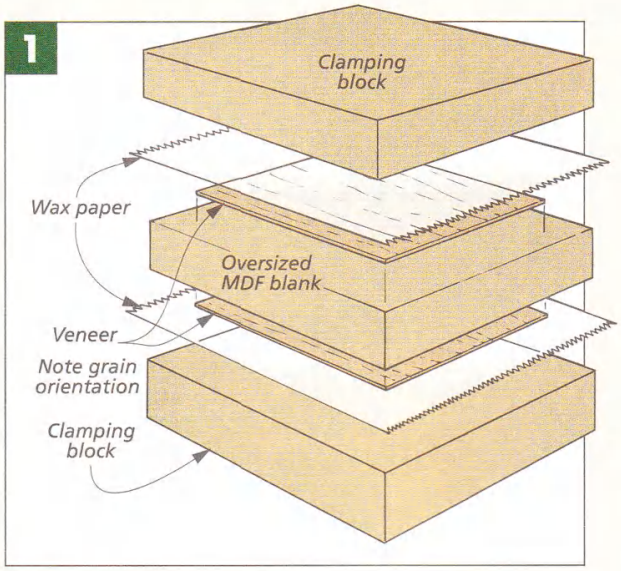

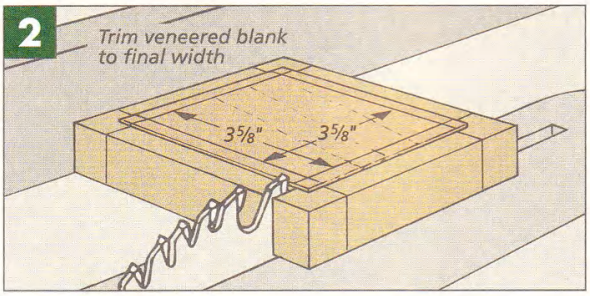

INLAY STRIPS

In addition to veneer, another way to dress up your clock is to add a decorative inlay strip, see photo. Inlay strips are made up of many tiny pieces of wood of varying shades, usually organized into a geometric pattern. (See page 35 for sources.)

To apply the inlay, start by routing a shallow rabbet around the edge of the panel, see Step 1. (The size of the rabbet will be determined by the inlay strip you're using.) Then miter the inlay strips to length and carefully glue them into the rabbets, see Step 2.

To hold the strips in place, I wrapped several rubber bands around the panel. Then after the glue is dry, you can use a cabinet scraper to gently scrape the inlay flush with the surface, see Step 3.

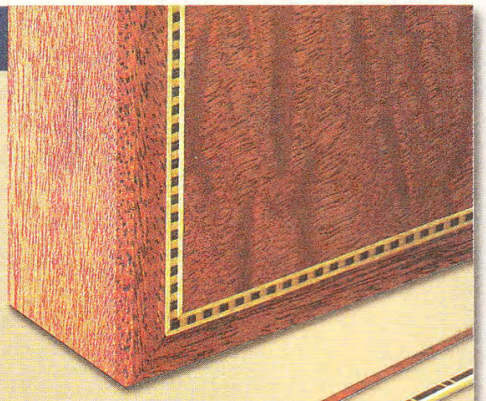

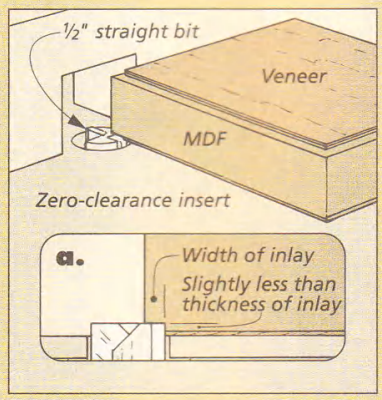

1 *Rout a rabbet along the edge of the panel for the inlay. The depth of the rabbet should be slightly less than the thickness of the inlay.*

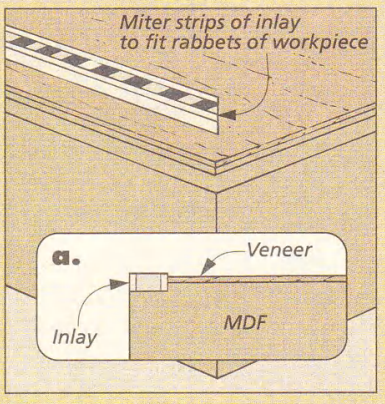

2 *Miter the ends of the inlay strips and glue them into the rabbets. Rubber bands can be used to hold the inlay in place while the glue dries.*

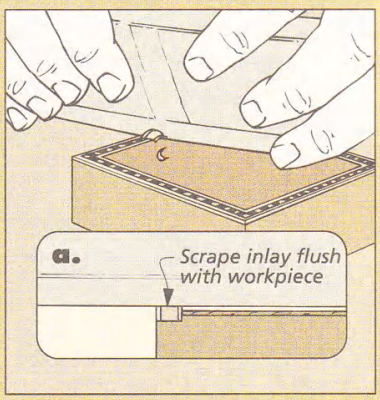

3 *Scrape the inlay flush instead of sanding it. The dyes used in inlays create colored sawdust when sanded, which can clog the pores of the wood.*

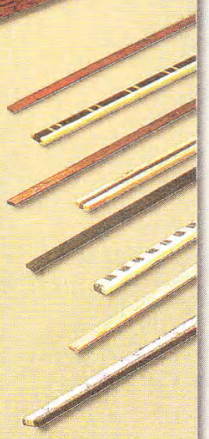

▲ *Inlay strips come in a variety of sizes and designs.*

TALKING SHOP

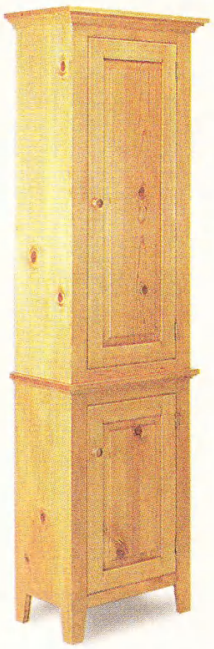

▲ *Tall projects like this chimney cupboard are especially prone to racking. Mortise and tenon face frames can help prevent this.*

Face Frame Construction

Q: I'm planning to build the Chimney Cupboard from issue #116, but I have a question concerning the face frames on both the upper and lower cabinets. Why bother to construct the face frames with mortise and tenon joints when they're just glued to the front of the cabinet?

It seems to me that it would be quicker to just nail the stiles to the front of the case (or better yet, pin them with dowels) and then cut the rails to fit in between.

A: Cabinetmakers have been using face frame construction for centuries. In essence, it consists of closing in the front of a cabinet by attaching a frame and then adding doors or drawers.

FRAMES FOR LOOKS. Today, face frames are still used in abundance on kitchen cabinets. Most built-in kitchen cabinets are really nothing more than large boxes, often made of particle board or plywood, with a solid wood face frame. The face frame conceals the plywood or particle board edges of the "box" and creates the openings for doors or drawers.

FRAMES FOR STRENGTH. With a project like the chimney cupboard on the other hand, the face frame serves an important structural purpose as well. Unlike a built-in cabinet that is securely fastened to the wall, a free-standing piece of furniture relies upon the face frame to prevent it from racking. The face frame acts as a cross brace, stiffening the "box" of the cabinet and helping it stand up to pressure exerted against the sides or from the top.

In order to do this, the face frame needs to be as rigid as possible. This is where the mortise and tenon joints come into play. Mortise and tenon joints lock the rails and stiles of the face frame together, see drawing above.

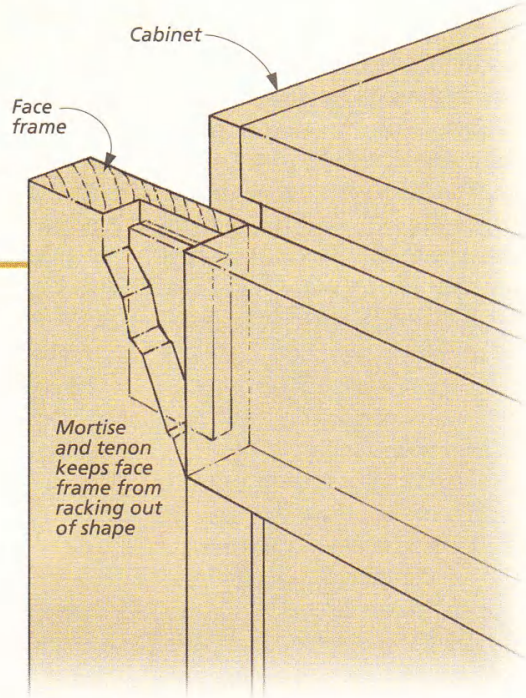

The shoulders of the tenons prevent the rails from twisting, thereby holding the frame square. When the face frame is attached to the front of the cabinet, this strength is transferred to carcase, locking it in place and keeping it from racking.

Without the mortise and tenon joints, there's nothing to hold the rails and stiles square. The face frame is held together only by the nails or dowels that attach it to the cabinet. This means that if the cabinet racks, the face frame will twist out of shape right along with it, see Fig. 1.

KEEPING FRAMES FLAT. Aside from preventing racking, there's another reason to use mortise and tenon joints to make face frames. It has to do with keeping the frame flat and even.

Since the face frame is attached to the front of the cabinet only around the edges, there's nothing to prevent the pieces from cupping, see Fig. 2. In addition, over time the action of opening and closing the door can knock the rails and stiles out of alignment.

Mortise and tenons prevent the rails and stiles from twisting, thereby keeping the pieces flat and in the same plane. W

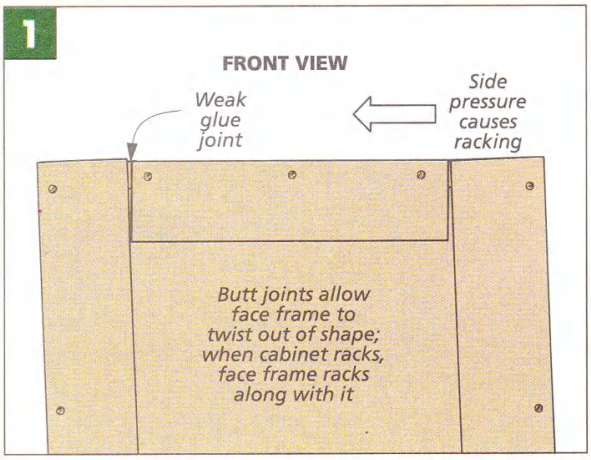

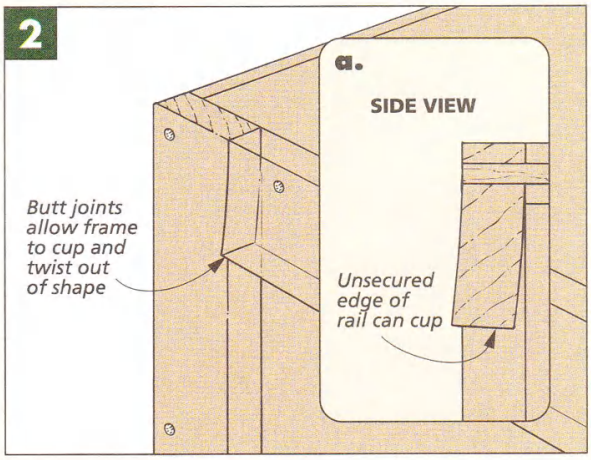

SOURCES

Woodsmith Project Supplies is currently offering hardware kits for some of the projects featured in this issue. Similar supplies for these projects are also available at local woodworking stores or the mail order sources listed at right.

HOLIDAY LANTERN

To make the holiday lantern on page 18, you'll need quite a variety of supplies: a socket/light switch and plug, birch specialty wood parts, rice paper, Baltic birch plywood panels, plus a handful of screws and nuts. So *Woodsmith Project Supplies* has decided to put together a hardware kit that includes everything needed to build the lantern, except for the solid wood pieces for the top and bottom of the lantern, see left photo below. (This kit also includes full-size patterns for all four panel designs.)

• Holiday Lantern Hardware Kit
7120-100 ..... $19.95

Note: If you wish to get your own supplies, the socket/light switch and specialty wood parts can be found at some local woodworking stores or the sources at right. And to find the rice paper, you'll need to visit a local art store or a good craft store.

FOLDING CLOCK

A hardware kit for the folding clock on page 28 is currently available from *Woodsmith Project Supplies*, see right photo below. This includes all the hardware you'll need for building the clock. Besides the wood, MDF, veneer, and inlay, all you will need to provide are the batteries for the clock ("N" cell) and a small piece of acetate to protect the photo.

Speaking of hardware, I should mention a couple things about the hardware in this kit. The magnets we used to hold the photo frame aren't your refrigerator-variety magnets. We used rare earth magnets. And though only 1/4" in diameter, they're really surprisingly strong.

Also, since this project will get a close examination any time a person wants a closer look at the photo, we picked the very best hinges we could find. They're heavy, solid brass hinges with a bright, smooth finish.

• Desk Clock Hardware Kit
7120-200 ..... $37.95

VENEERS & INLAY. If you wish to dress up your clock with veneers and inlay, you may be able to find them at a local woodworking store. Or you can check out the sources listed at right.

BOOKCASE

Besides screws, all you need for the bookcase are drawer pulls, shelf pins, and nylon glide strips. We purchased all these supplies from Rockler Woodworking, see the listing at right.

***Holiday Lantern**. This kit includes all the hardware you'll need to build the holiday lantern. All you need to supply is the solid wood for the top and base.*

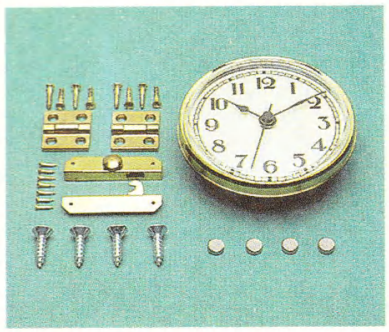

***Folding Desk Clock**. This kit includes a press-in quartz movement, 3/4" heavy brass hinges, a spring catch, four small magnets and the screws.*

MAIL ORDER SOURCES

Similar project supplies and hardware may be ordered from the following companies:

Bob Morgan Woodworking Supplies
502-456-2545
Veneer & inlay

Cherry Tree Toys
800-848-4363
Lantern hardware

Constantine's
800-223-8087
Veneer & inlay

Lee Valley
800-871-8158
Clock hardware

Meisel Hardware
800-441-9870
Lantern hardware

Precision Movements
800-533-2024
Clock hardware

Woodcraft
800-225-1153
Veneer & inlay

Rockler Woodworking (Woodworkers' Store)
800-279-4441
Clock hardware, Bookcase hardware

WOODSMITH PROJECT SUPPLIES

To order hardware kits or shop drawings from *Woodsmith Project Supplies*, please use our Toll Free order line, see below. It's open Monday through Friday, from 8 AM to 5 PM Central Time. Before calling, please have your VISA, MasterCard, or Discover Card ready.

If you would like to mail in your order, call the number below for more information concerning shipping charges as well as any applicable sales tax.

1-800-444-7527
When ordering, please use Key W120

Note: Prices subject to change after February 1999.

WoodNet™ NOW ON THE WEB!

- Over 100 Woodworking Tips Online
- Project Plans You Can Download
- Forums for Woodworking, Tools & Classifieds
- Catalog of Project Kits, Tools & Jigs
- Power Tool Reviews
- Links to Other Woodworking Sites
- *Woodsmith/ShopNotes* Back Issue Index

Point your browser to:

http://www.woodsmith.com

Then select the "WoodNet" option from the menu.

FINAL DETAILS

▲ **Holiday Lantern.** *Take your pick from four different scroll sawn scenes for this unique holiday project. A flip of a switch is all it takes to "light" the lantern and create a warm glow. Plans begin on page 18.*

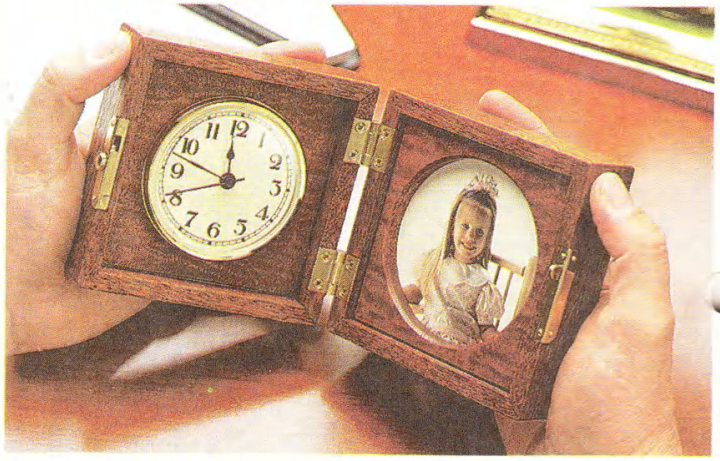

▲ **Folding Desk Clock.** *Solid brass hardware accents the figured veneer used to make this handsome desk clock and picture frame. Step-by-step instructions start on page 28.*

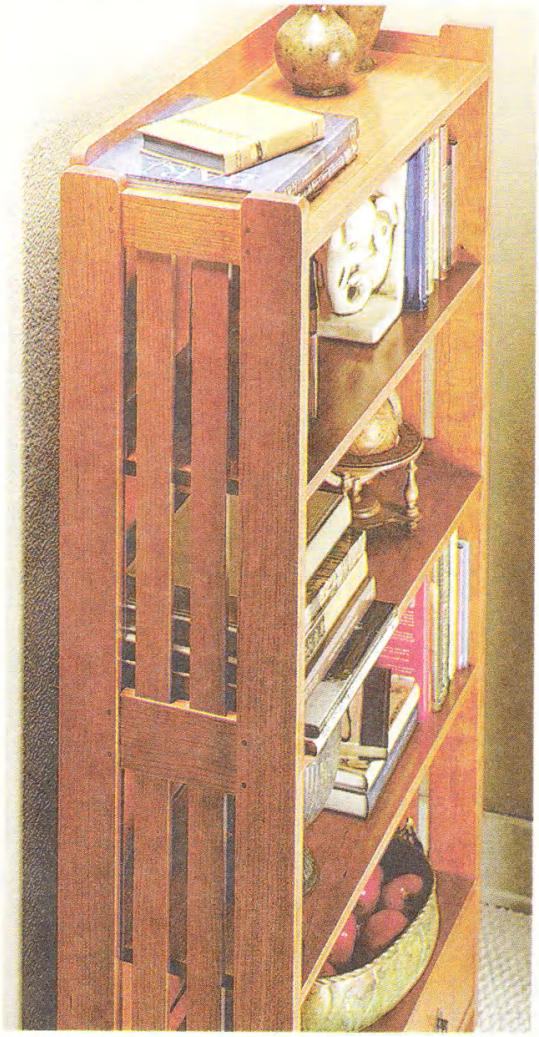

▲ **Two-Drawer Bookcase.** *This stately, solid cherry bookcase features traditional pegged mortise-and-tenon construction. Turn to page 6 for plans.*